71-8.3-LLO6

Floor Mounted Tub Group with Hand Shower
Hand Shower Flow Rate: 1.75 GPM
Requires concealed rough SS-FL8.3

Note: Some building codes require remote pressure balance valves for anti-scald

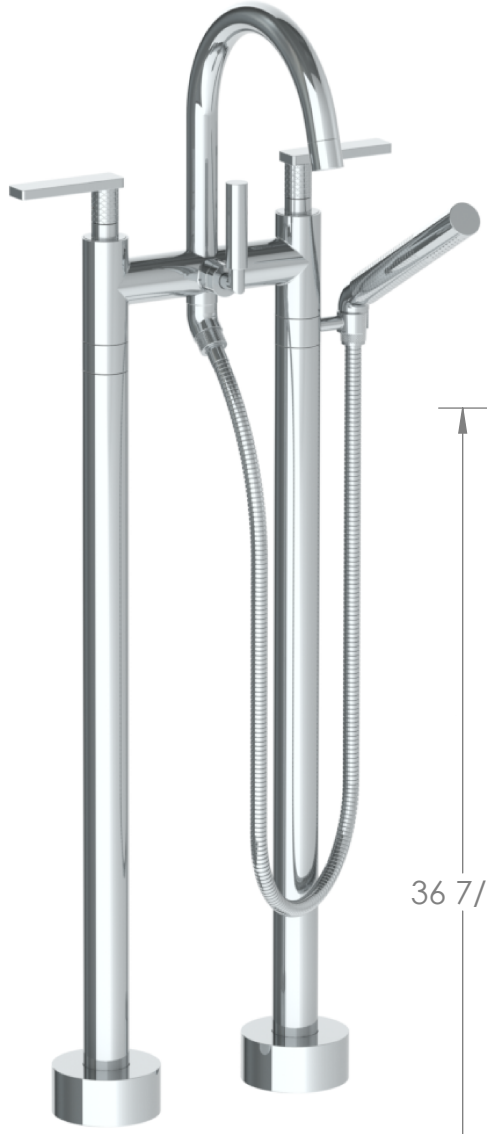

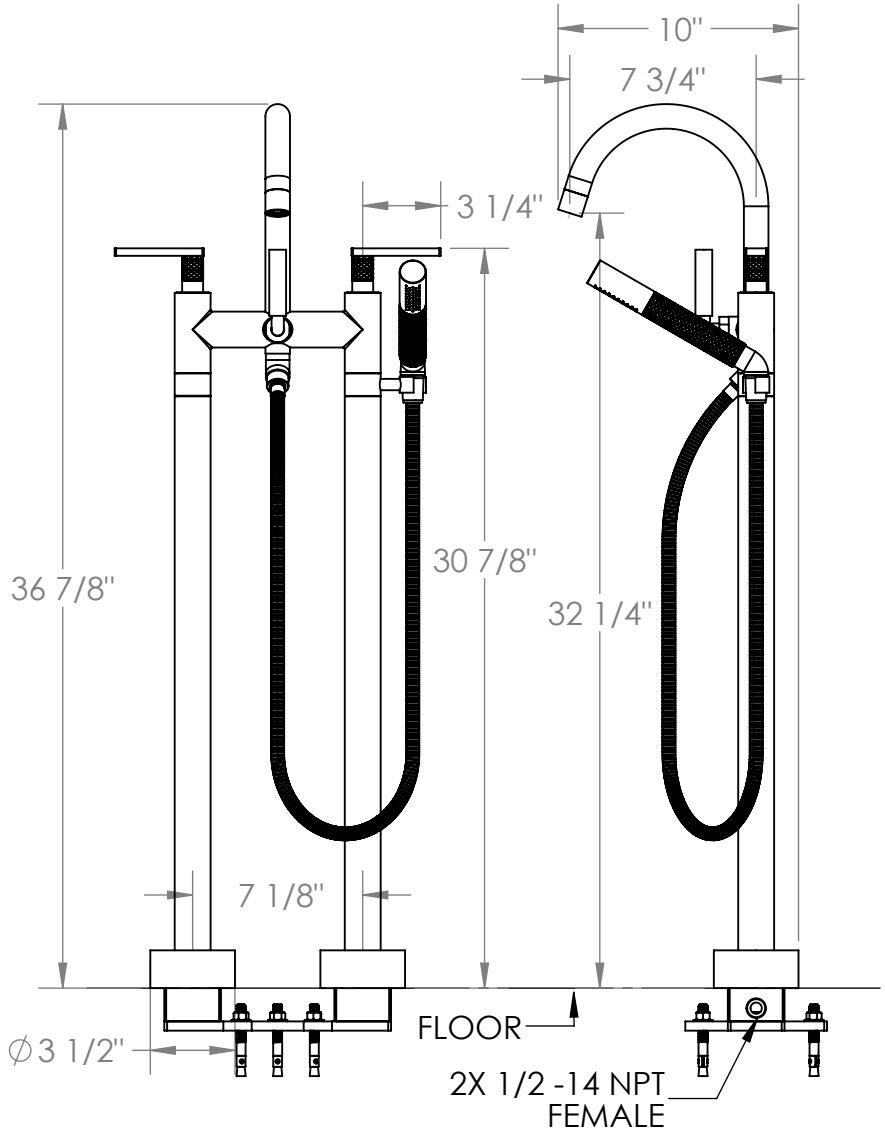

Meets the applicable requirements of ASME A112.18.1-2005/CSA B125.1-05, entitled “Plumbing Supply Fittings”

350 Dewitt Ave Brooklyn NY 11207 USA T 718 257 2800 F 718 257 2144 info@watermark-designs.com