25-6.1HS-IN14

Wall Mounted Exposed Shower with Hand Shower

Flow Rate: 1.75 GPM

Note: Some building codes may require a remote pressure balance valve for anti-scald, such as the SS-PB50.

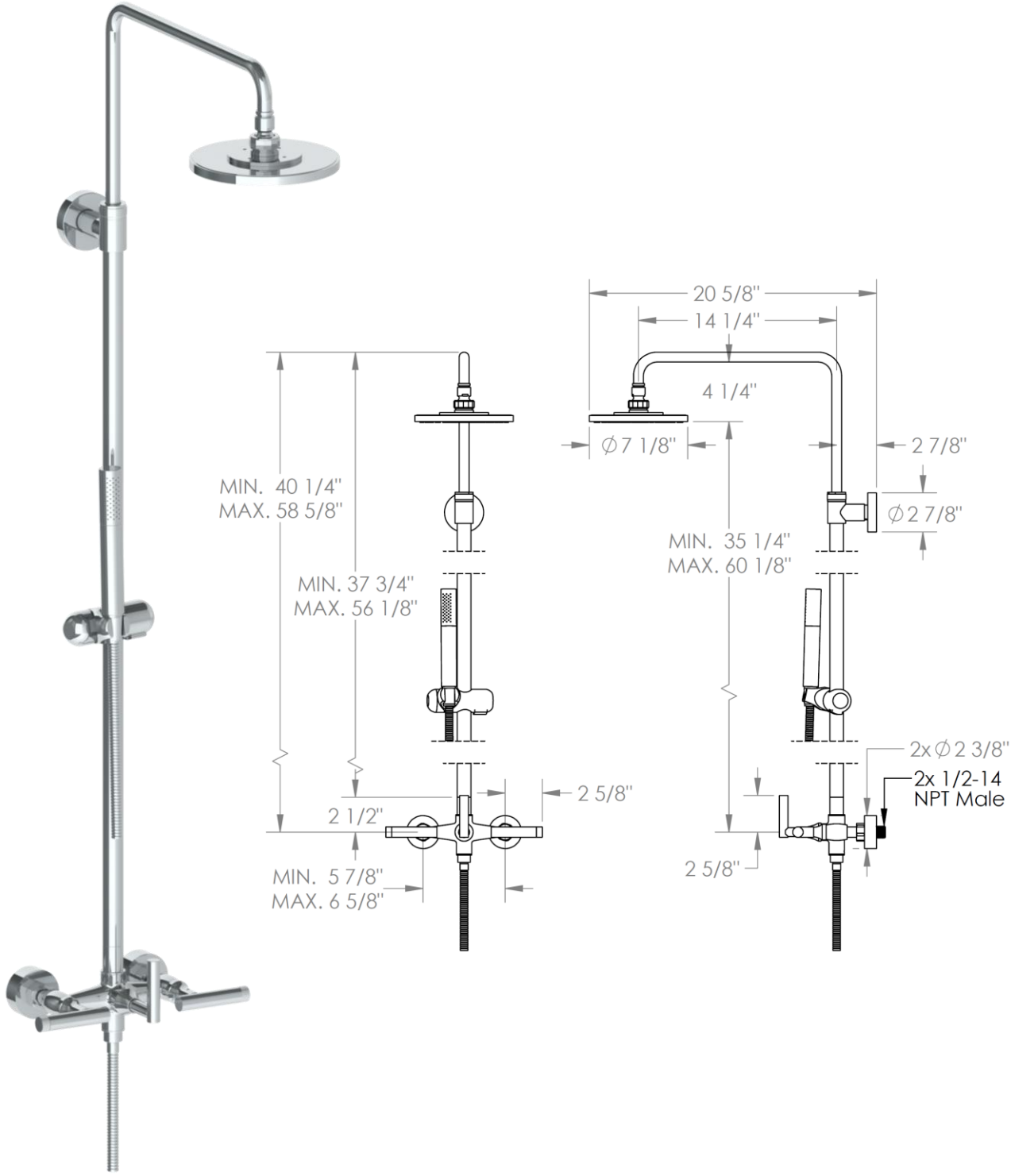

Meets the applicable requirements of ASME A112.18.1-2005/CSA B125.1-05, entitled “Plumbing Supply Fittings”

350 Dewitt Ave Brooklyn NY 11207 USA T 718 257 2800 F 718 257 2144 info@watermark-designs.com