D4932

Sch. 40 PVC

2-Hole Tip Toe Waste & Overflow

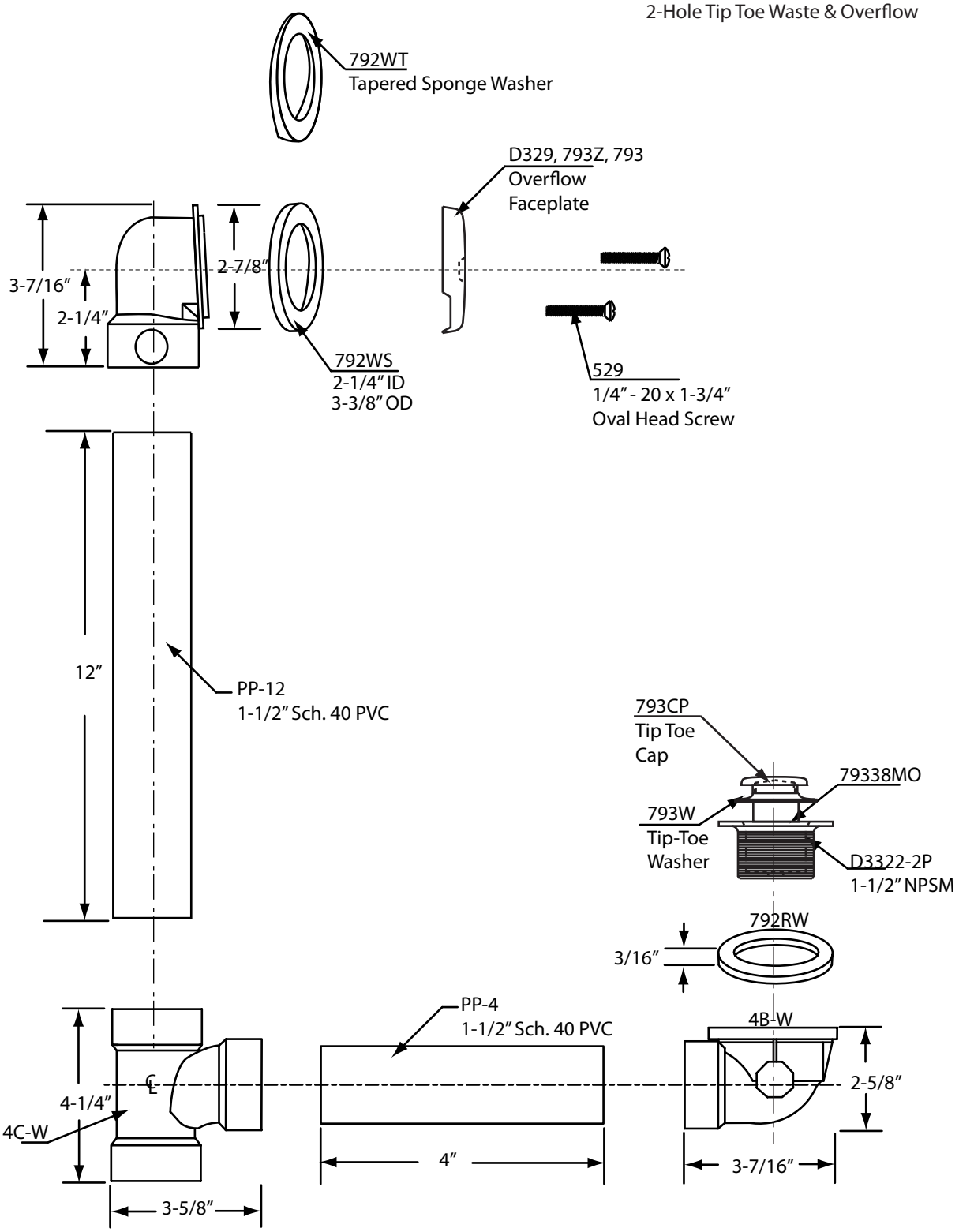

WESTBRASS
Fine Decorative Plumbing Since 1935
2429 East Olympic Blvd. Los Angeles, CA 90021
213-627-8441 • FAX 213-627-2844 • www.westbrass.com