PART NO. D2181	SPECIFICATION SHEET	Brass 2″ bar sink Drain With Grid, 1-1/2″ OD tubular inlet

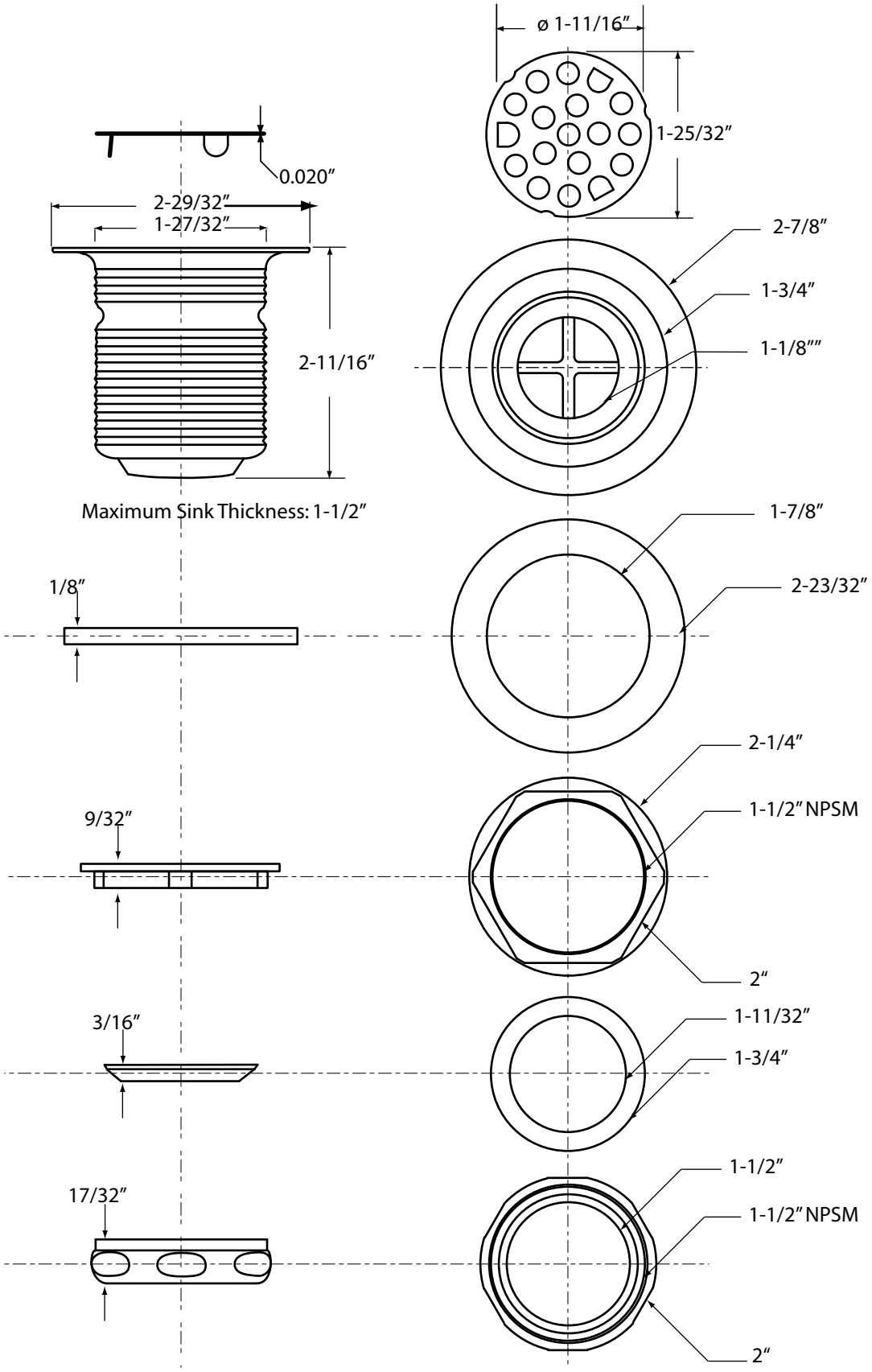

WESTBRASS
Fine Decorative Plumbing Since 1935

info@westbrass.com | www.westbrass.com | (213) 627-8441 | FAX (213) 627-2844