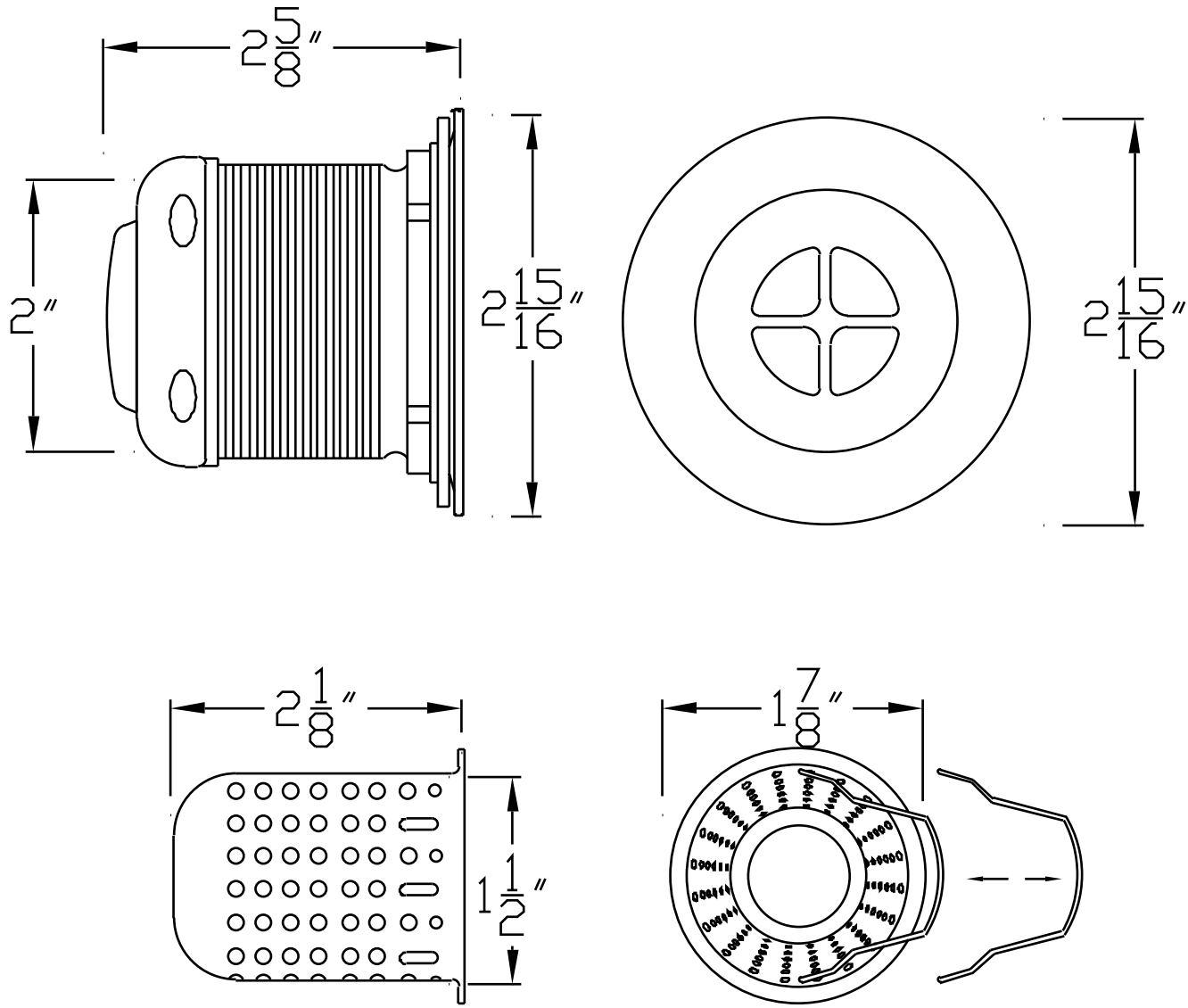PART NO. D218	SPECIFICATION SHEET	Brass junior style basket strainer