MONTE CARLO, GOLD PORCELAIN

U8B-181/SLA

Angle supply valve with 3/8" adaptor set

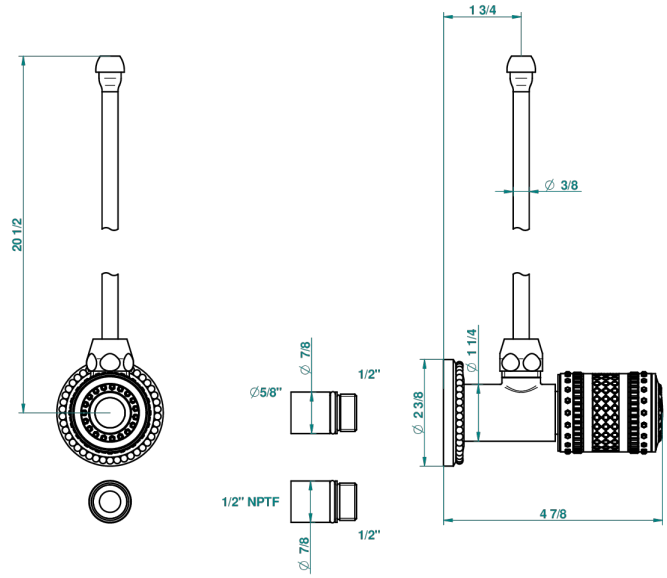

CHARACTERISTIC

- Monte Carlo, gold porcelain
- Angle supply valve with 3/8" adaptor set

AVAILABLE FINITIONS

Black nickel - D24
Chrome polished - A02
Chrome polished / gold polished - G02
Copper antique matt, coated - H07
Gold mat - F07
Gold polished - F01
Gold satiney - F03
Light coated bronze - D01
Matt chrome (American satin) - C02
Matt nickel (American satin) - C01
Nickel antique / Sovereign - H28
Nickel polished - B01
Rose Gold - F27
Satin chrome - C03
Silver polished, antique - H03
Silver rhodium - F18
Soft gold - F30
Soft matt gold - F31
Soft satin gold - F32