TROCADERO TIGER EYE

U7E-6532/60A

Deck mounted mixer with handshower, progressive cartridge

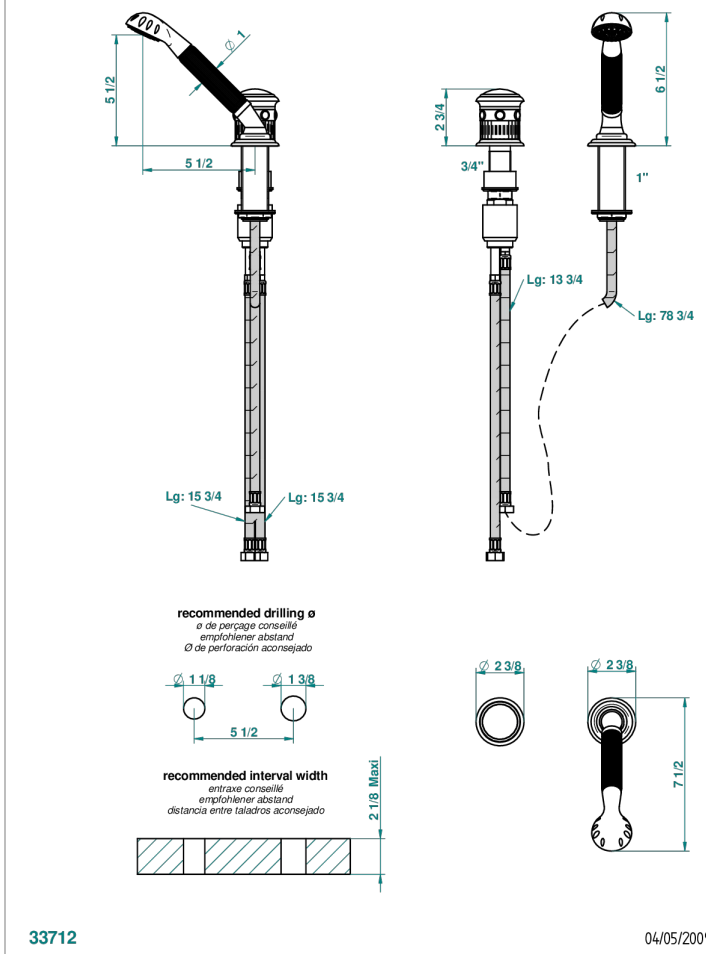

CHARACTERISTIC

- Trocadéro Tiger eye
- Deck mounted mixer with handshower, progressive cartridge

TECHNICAL SPECS

- Recommandé : 3 bars (max. 5 bars) - Advised : 43,5 psi (max. 72 psi)
- 9,5 l/min à 3 bars (2.5 gpm at 43.5 psi)

AVAILABLE FINITIONS

Black nickel - D24
Blush PVD - H62
Brass color PVD - H49
Brown bronze color PVD - F33
Chrome polished - A02
Chrome polished / gold polished - G02
Gold color PVD - H52
Gold mat - F07
Gold polished - F01
Gold satiney - F03
Graphite PVD - H64
Matt Umber PVD - H67
Matt blush PVD - H60
Matt brass color PVD - H50
Matt brown bronze color PVD - F34
Matt chrome (American satin) - C02
Matt gold color PVD - H53
Matt graphite PVD - H65
Matt nickel (American satin) - C01
Matt nickel color PVD - H56
Nickel antique / Sovereign - H28
Nickel color PVD - H55
Nickel polished - B01
Rose Gold - F27
Satin chrome - C03
Silver rhodium - F18
Soft gold - F30
Soft matt gold - F31
Umber PVD - H66