1900

G25-5400BE

Trim for THG thermostat 2 volume controls, rough part supplied with fixing box ref. 5 400AE/US

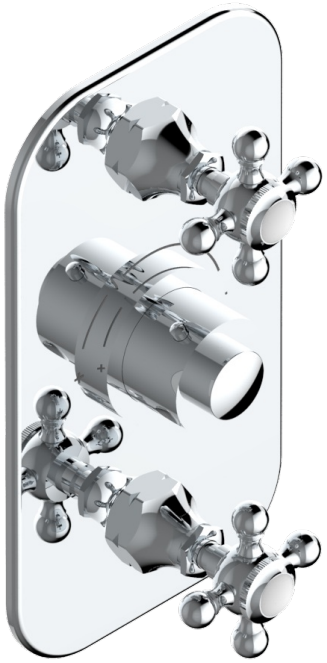

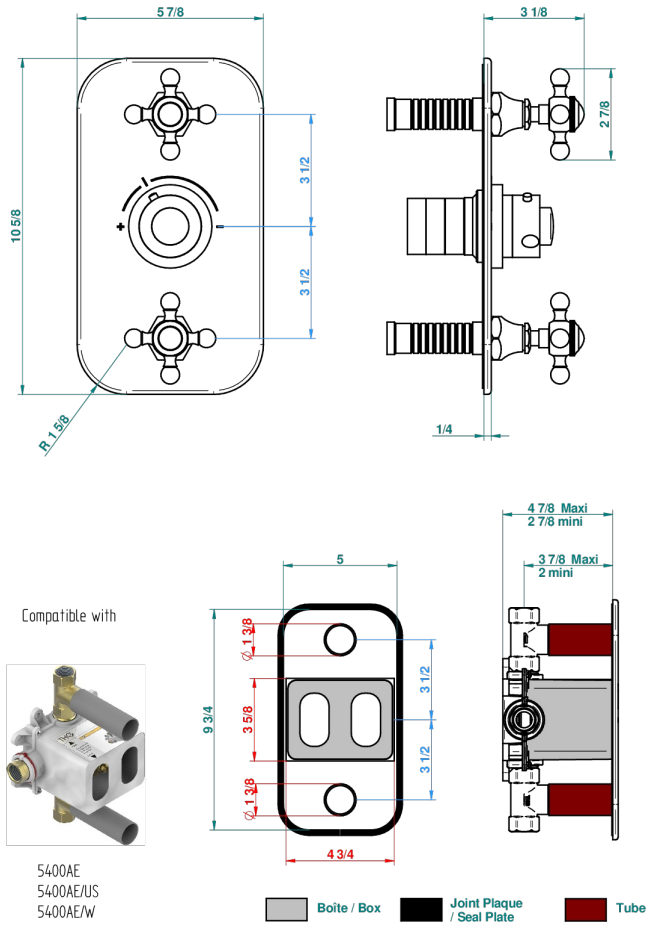

CHARACTERISTIC

- Built-in thermostatic cover for 5400AE - 5400AE/W - 5400AE/US with 2 no. 3/4" outputs
- Requires concealed thermostat réf 5400AE - 5400AE/W - 5400AE/US
- For shower 2 simultaneous functions
- Temperature control knob with security stop at 38°C
- Solid brass plate and knob
- ASME : ASME A112.18.1-2011/CSA B125.1-11
- DVGW : DW-6512CQ0608

STANDARDS

RELATED SKU'S

- Ref. G00-5400AE/US 3/4" THG thermostat with wax cartridge, with two valves delivered with a built-in box, no trim
- Ref. G00-5100G Reinforced stop ring for THG thermostatic with fixing set

AVAILABLE FINITIONS

Black nickel - D24
Blush PVD - H62
Brass color PVD - H49
Brown bronze color PVD - F33
Chrome polished - A02
Chrome polished / gold polished - G02
Copper antique matt, coated - H07
Gold color PVD - H52
Gold mat - F07
Gold polished - F01
Gold satiney - F03
Graphite PVD - H64
Light coated bronze - D01
Matt Umber PVD - H67
Matt blush PVD - H60
Matt brass color PVD - H50
Matt brown bronze color PVD - F34
Matt chrome (American satin) - C02
Matt gold color PVD - H53
Matt graphite PVD - H65
Matt nickel (American satin) - C01
Matt nickel color PVD - H56
Nickel antique / Sovereign - H28
Nickel color PVD - H55
Nickel polished - B01
Rose Gold - F27
Satin chrome - C03
Silver polished, antique - H03
Silver rhodium - F18
Soft gold - F30