JAIPUR SATINY CRYSTAL

A9B-181/SWC

Angle supply valve with 3/8" adaptor set for toilet

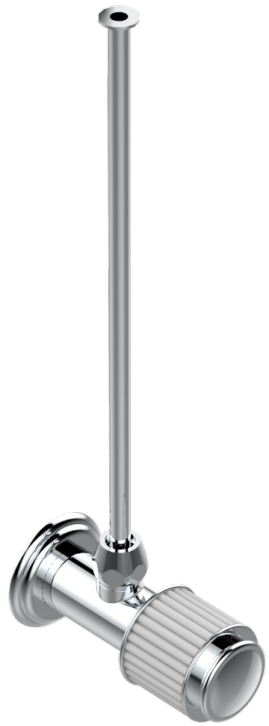

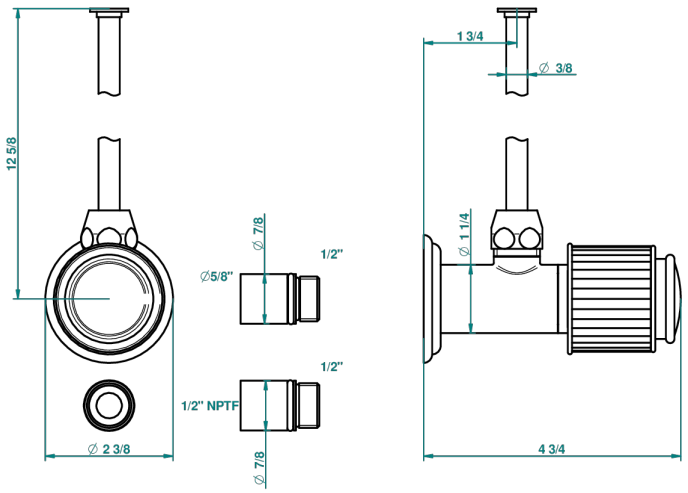

CHARACTERISTIC

- Jaipur satiny crystal
- Angle supply valve with 3/8" adaptor set for toilet

AVAILABLE FINITIONS

Black nickel - D24
Blush PVD - H62
Brass color PVD - H49
Brown bronze color PVD - F33
Chrome polished - A02
Chrome polished / gold polished - G02
Copper antique matt, coated - H07
Gold color PVD - H52
Gold mat - F07
Gold polished - F01
Gold satiney - F03
Graphite PVD - H64
Light coated bronze - D01
Matt Umber PVD - H67
Matt blush PVD - H60
Matt brass color PVD - H50
Matt brown bronze color PVD - F34
Matt chrome (American satin) - C02
Matt gold color PVD - H53
Matt graphite PVD - H65
Matt nickel (American satin) - C01
Matt nickel color PVD - H56
Nickel antique / Sovereign - H28
Nickel color PVD - H55
Nickel polished - B01
Rose Gold - F27
Satin chrome - C03
Silver polished, antique - H03
Silver rhodium - F18
Soft gold - F30