PERLE

A2I-151BP/US

Widespread lavatory set with waterfall spout and with drain

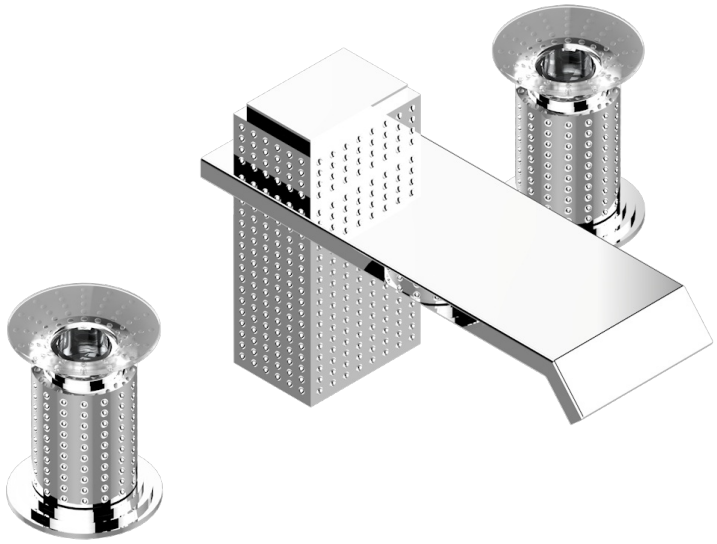

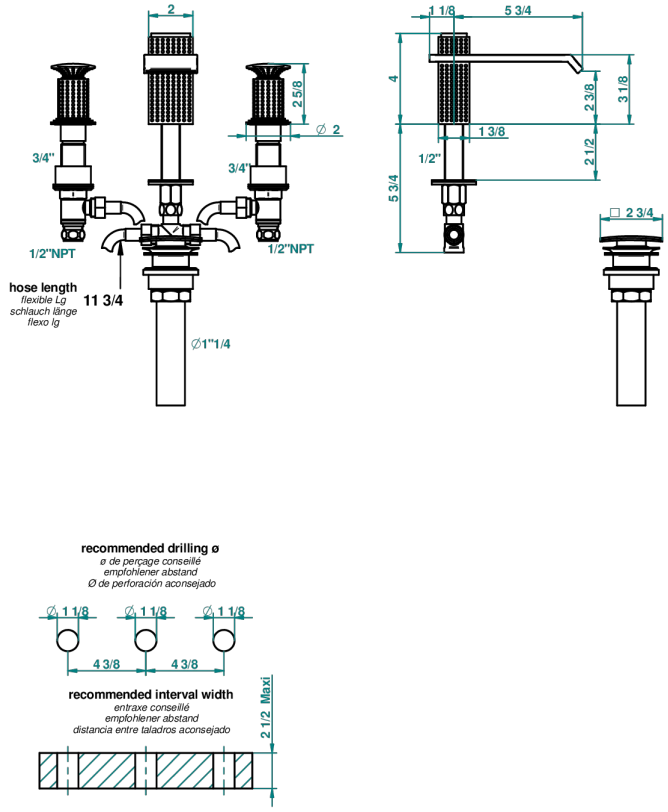

CHARACTERISTIC

- Perle
- Widespread lavatory set with waterfall spout and with drain

AVAILABLE FINITIONS

Blush PVD - H62
Brass color PVD - H49
Brown bronze color PVD - F33
Chrome polished - A02
Chrome polished / gold polished - G02
Gold color PVD - H52
Gold polished - F01
Graphite PVD - H64
Matt Umber PVD - H67
Matt blush PVD - H60
Matt brass color PVD - H50
Matt brown bronze color PVD - F34
Matt gold color PVD - H53
Matt graphite PVD - H65
Matt nickel color PVD - H56
Nickel color PVD - H55
Nickel polished - B01
Rose Gold - F27
Silver rhodium - F18
Soft gold - F30
Soft satin gold - F32
Umber PVD - H66