PERLE

A2I-112BSGUS

Roman tub set with diverter spout and handshower, 3/4" valves

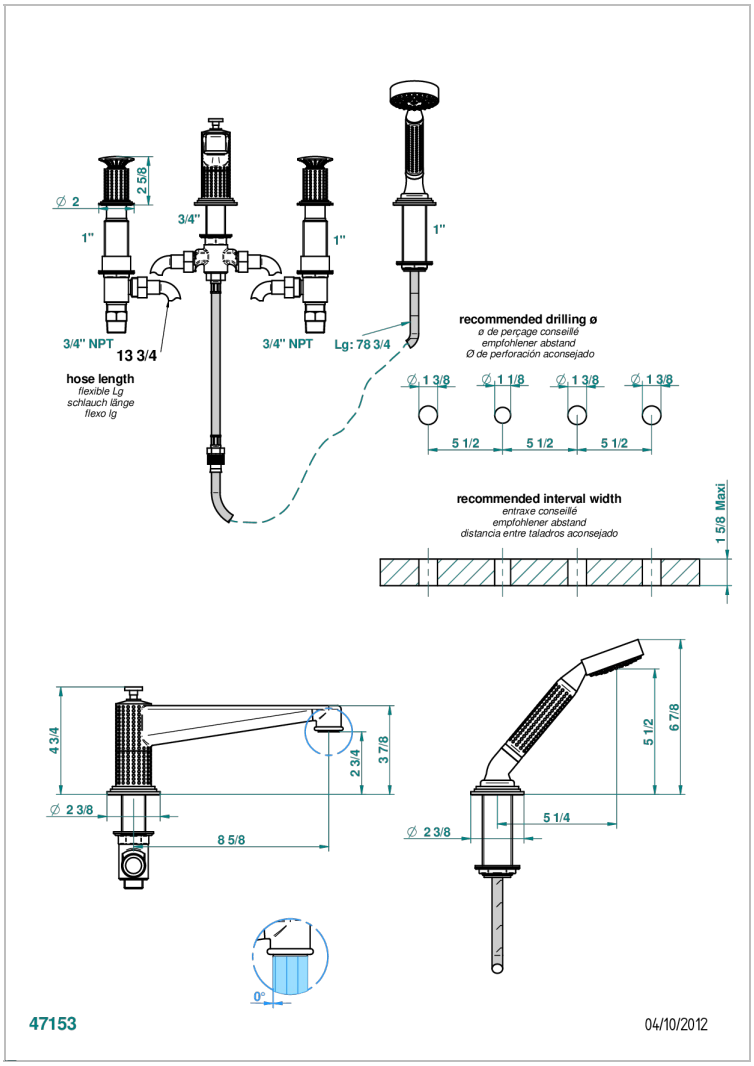

CHARACTERISTIC

- ASME : ASME A112.18.1-2011/CSA B125.1-11

TECHNICAL SPECS

- Recommandé : 3 bars (max. 5 bars) - Advised : 43,5 psi (max. 72 psi)
- Bec : 35 l/min à 3 bars - Douchette : 9,5 l/min à 3 bars
- Spout : 9.26 gpm at 43.5 psi - Handshower : 2.5 gpm at 43.5 psi

STANDARDS

C UPC ®

AVAILABLE FINITIONS

Blush PVD - H62
Brass color PVD - H49
Brown bronze color PVD - F33
Chrome polished - A02
Chrome polished / gold polished - G02
Gold color PVD - H52
Gold polished - F01
Graphite PVD - H64
Matt Umber PVD - H67
Matt blush PVD - H60
Matt brass color PVD - H50
Matt brown bronze color PVD - F34
Matt gold color PVD - H53
Matt graphite PVD - H65
Matt nickel color PVD - H56
Nickel color PVD - H55
Nickel polished - B01
Rose Gold - F27
Silver rhodium - F18
Soft gold - F30
Soft satin gold - F32
Umber PVD - H66