CLUB SAINT-GERMAIN

G7H-3202/US

Single hole bidet faucet with drain

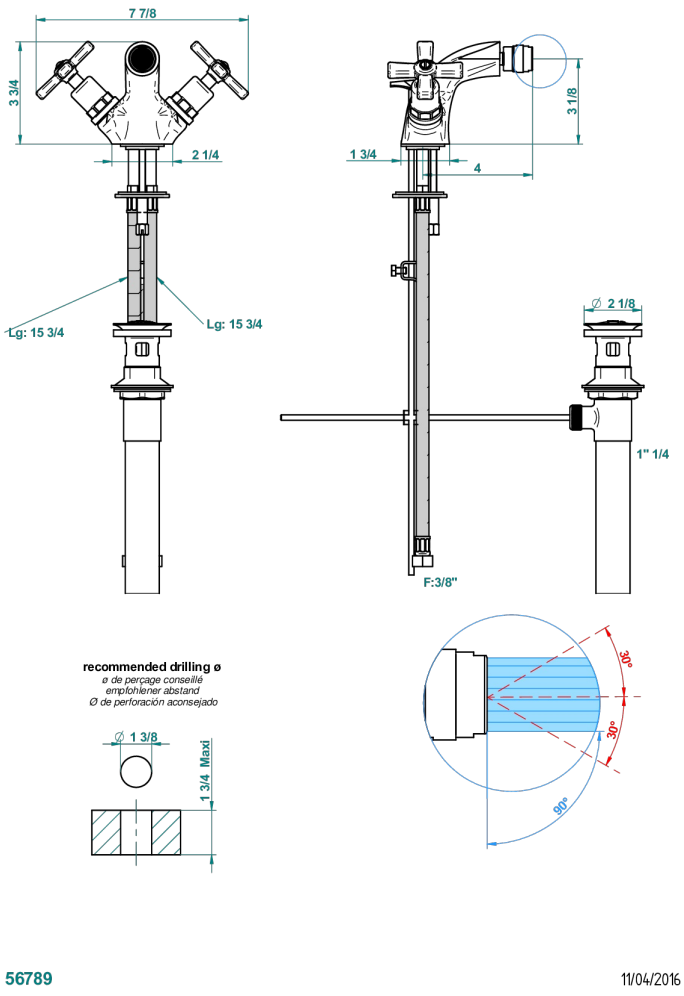

CHARACTERISTIC

- ASME : ASME A112.18.1-2011/CSA B125.1-11

TECHNICAL SPECS

- Recommandé : 3 bars (max. 5 bars) - Advised : 43,5 psi (max. 72 psi)
- 5,7 l/min à 3 bars (1.5 gpm at 43.5 psi)
- 1.2 gpm on demand in accordance with California's rules

STANDARDS

C UPC ®

AVAILABLE FINITIONS

Blush PVD - H62
Brass color PVD - H49
Brown bronze color PVD - F33
Chrome polished - A02
Chrome polished / gold polished - G02
Copper antique matt, coated - H07
Gold color PVD - H52
Gold mat - F07
Gold polished - F01
Graphite PVD - H64
Light coated bronze - D01
Matt Umber PVD - H67
Matt blush PVD - H60
Matt brass color PVD - H50
Matt brown bronze color PVD - F34
Matt chrome (American satin) - C02
Matt gold color PVD - H53
Matt graphite PVD - H65
Matt nickel (American satin) - C01
Matt nickel color PVD - H56
Nickel antique / Sovereign - H28
Nickel color PVD - H55
Nickel polished - B01
Silver polished, antique - H03
Soft gold - F30
Soft matt gold - F31
Umber PVD - H66