# SAMUEL HEATH

**Product Number:** T10B1ALA09

**Description:** 1/2" Concealed thermostatic shower - 2 volume controls

## Finishes Available

Chrome Plate

Polished Nickel

Stainless Steel with Matt Black

City Bronze

Matt Black Chrome

Brushed Gold Matt

Polished nickel with gloss black chrome

Brushed Gold matt with City Bronze

Stainless steel finish with City Bronze

Antique Gold with gloss black chrome

## Specification Drawing

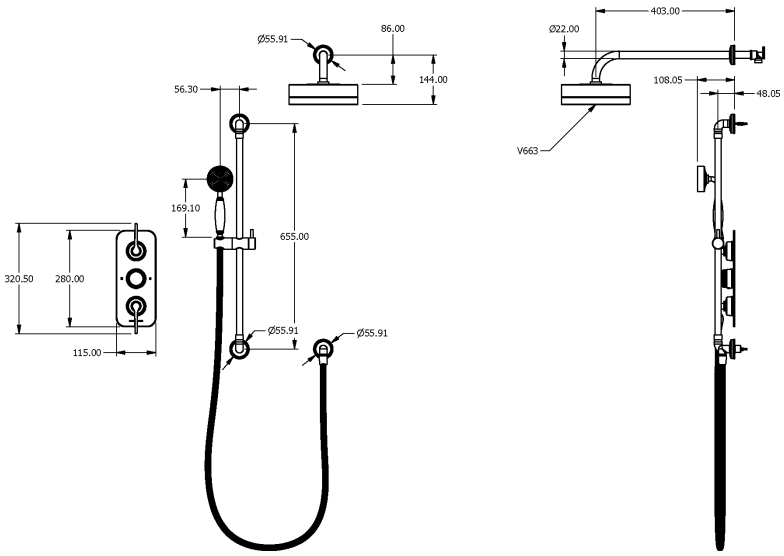


## Kit Components

T162-A

T164-A

T170

V654

V663

V941

**UK Customer Service**
Leopold Street
Birmingham
B12 0UJ
Tel: +44 121 766 4200
Email: info@samuel-heath.com

**US Customer Service**
Federal I.D. No. 58-1504682
Email: usa@samuel-heath.com

**Specification Enquiries**
Design Centre Chelsea Harbour
1st Floor, North Dome, London
SW10 0XE
Tel: 020 7352 0249
Email: showroom@samuel-heath.com