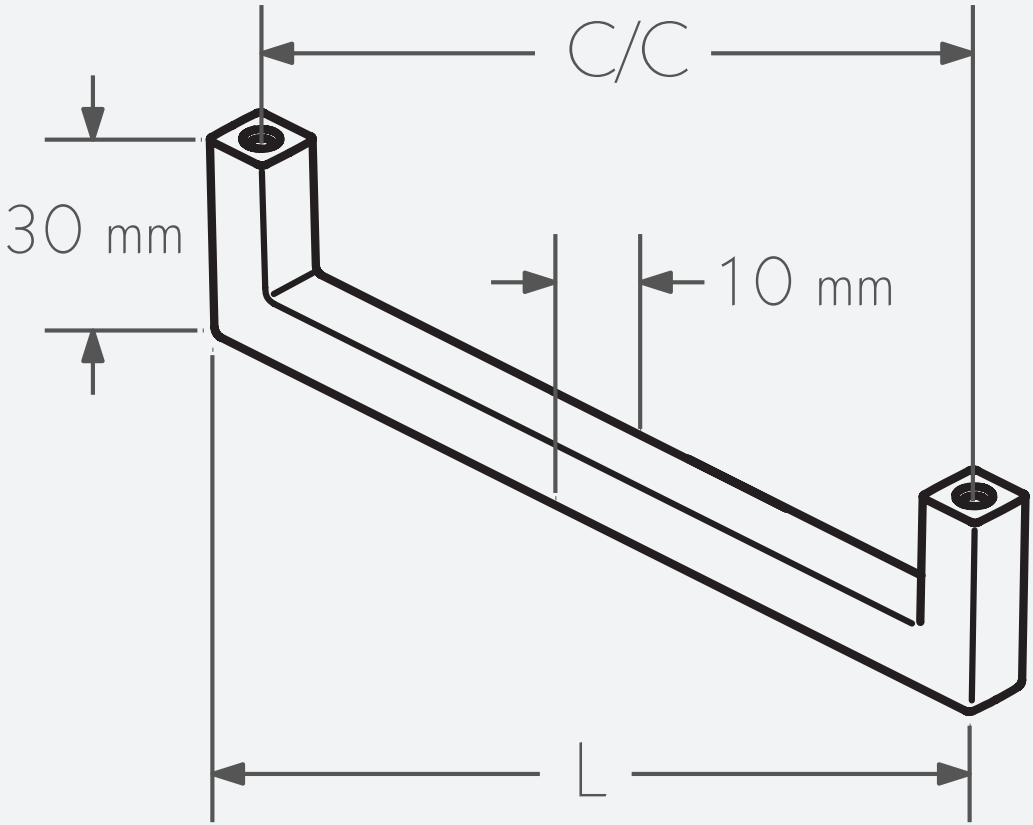

C/C:128mm; L:138mm

C/C:192mm; L:202mm