SIGMA
PRECISION CRAFTED

Specifications

Series 3300
Pressure Balance Tub and Shower Set

1.333268
(1.333268T - Trim Only)

Mixx Handle

Euro Style 20 pt.

FEATURES:

- Solid brass construction
- Valve cartridge: 18.30.893
- Diverter assembly: 18.30.894
- Screwdriver stop: 18.30.895
- Adjustable hot limit safety stop
- Reversible cartridge
- 5.0 GPM @ 60 PSI
- Certified to meet or exceed the following codes and standards: ASME A112.18.1/CSAB 125.1-2012

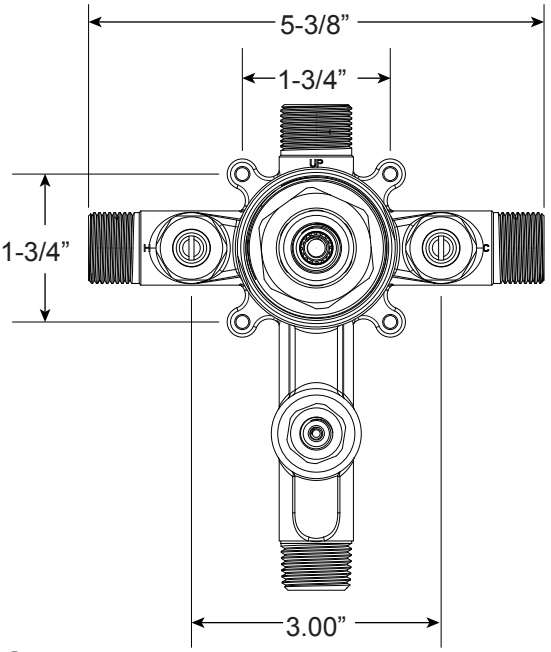

FRONT VIEW

Note: Stem and all-thread tube will be sent with handle trim.

SIDE VIEW

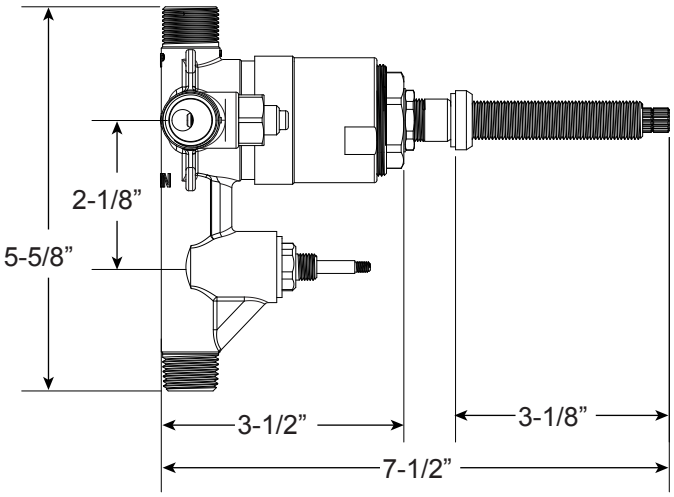

Current valve in use: Circa 4/2014 - present Contact Customer Service for Older Versions	For additional information on cartridges or extension kits, see ‘Rough Valving’ section in current catalog.

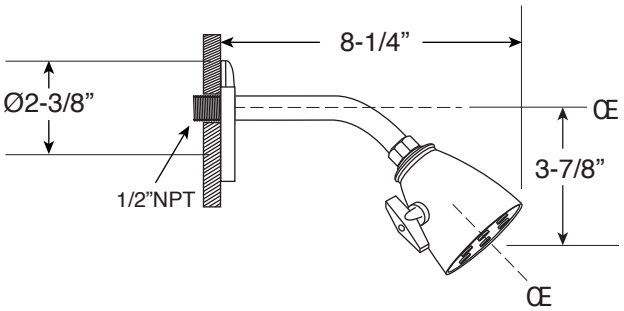

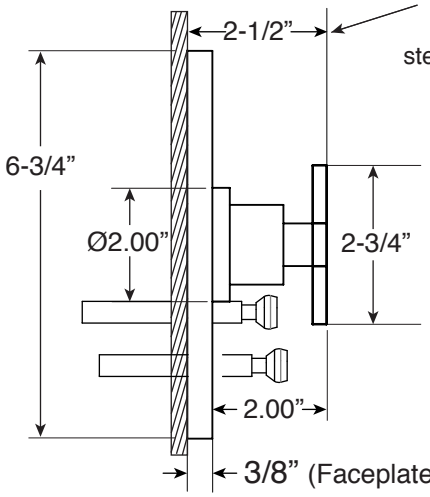

Note: See installation instructions for proper stem and all-thread tube length measurement.

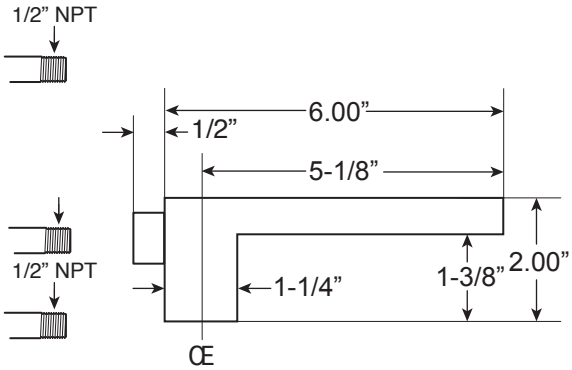

Note: Measurements are subject to change. No responsibility is assumed for use of superseded or voided pages.