SIGMA
PRECISION CRAFTED

Specifications

Series 4400

Roman Tub Set with Deckmount Handshower and Diverter Polaris Handle

1.442893
(1.442893T - Trim Only)

FEATURES:

- All brass construction.
- Lever style handles with inside screw attachment.
- 3/4” valve bodies with 20 pt. 1/4-turn ceramic disc cartridge.
- Available in all finishes. Warranty varies according to finish.
- Certified to meet or exceed the following codes and standards: ASME A112.18.1/CSAB 125.1-2012

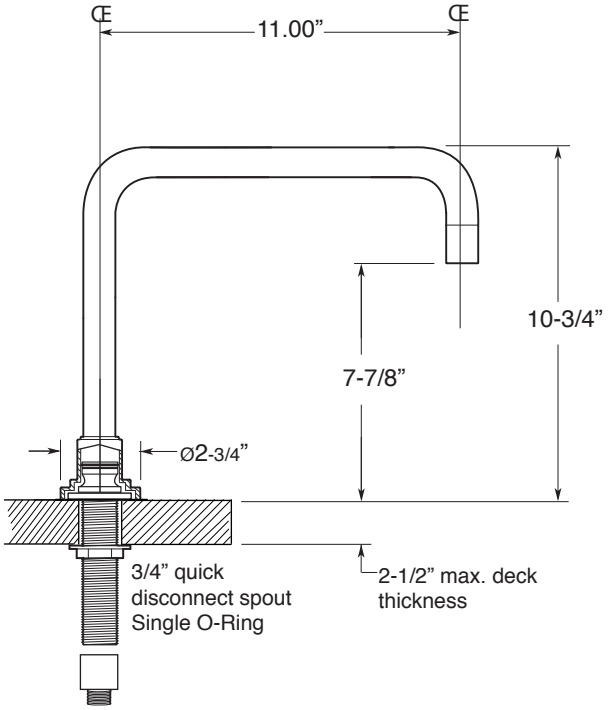

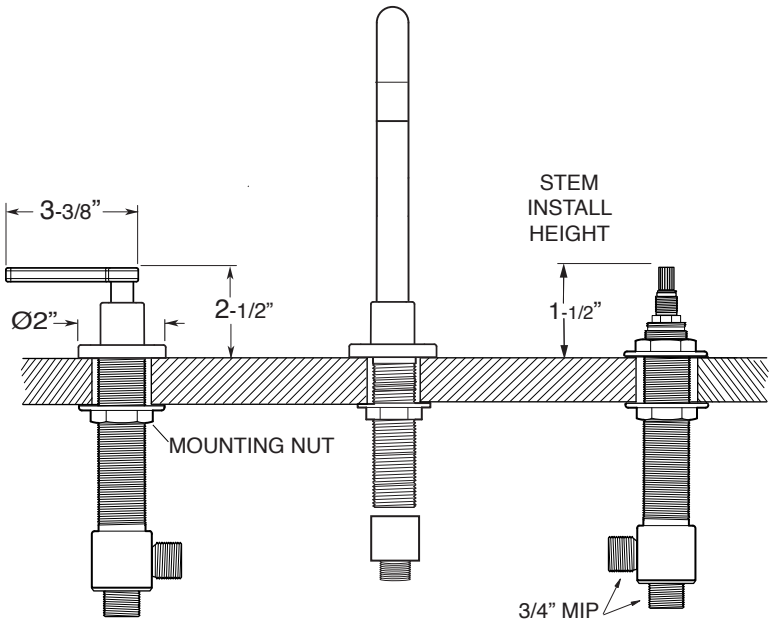

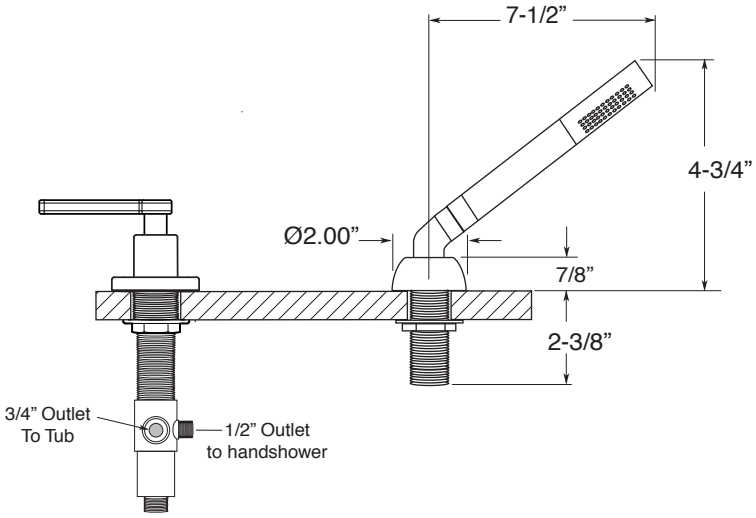

Spout and valves install through 1-1/4” diameter holes. Plumber to provide 3/4” supply lines to valves

NOTE: 1/2” outlet for in-line vacuum breaker (18.15.055), and 60” chrome spiral hose (18.10.016) - INCLUDED

Note: Measurements are subject to change or cancellation. No responsibility is assumed for use of superseded or voided pages.