T4KHORGDMW

Specifications

VOLUME CONTROL VALVE, TRIM ONLY

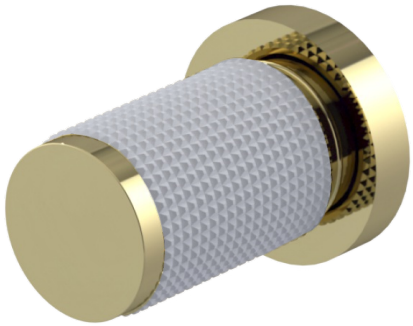

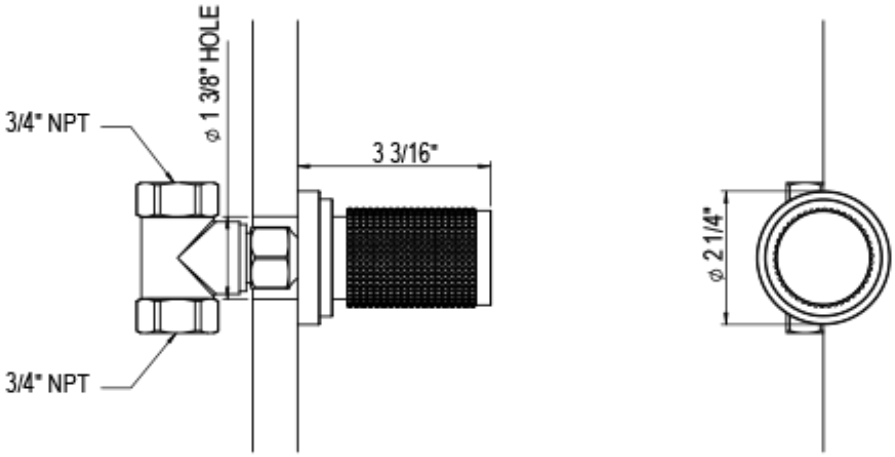

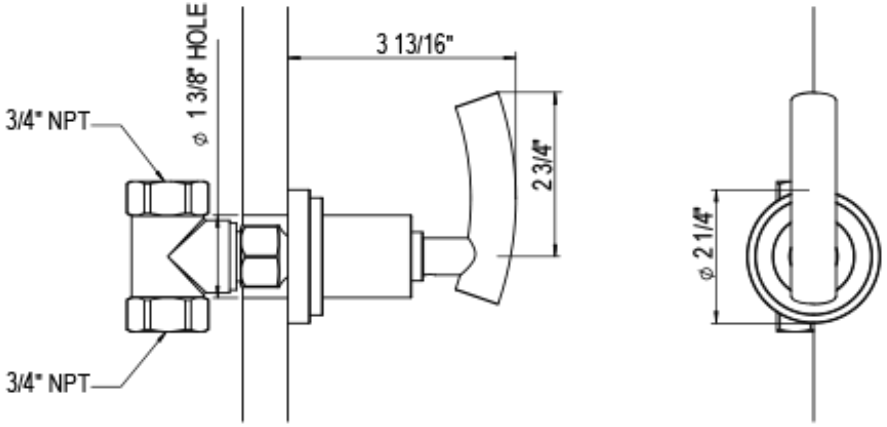

Tel: 905-851-6780
Fax: 905-851-8031
Toll Free: 800-461-5901