4-piece deck-mount tub filler with hand shower

GN12L

Specifications

Descriptions

- Ceramic cartridge
- 1-jet hand shower
- G½" inlet male

Available colors

- C : Chrome
- CW : Chrome/White
- BN : Brushed Nickel (PVD)
- PN : Polished Nickel (PVD)

Available flow

- 41.5 L/min, 11 gpm (US) 60psi

Certifications

- CSA B125.1
- ASME A112.18.1
- CMR248 Approval
- ADA

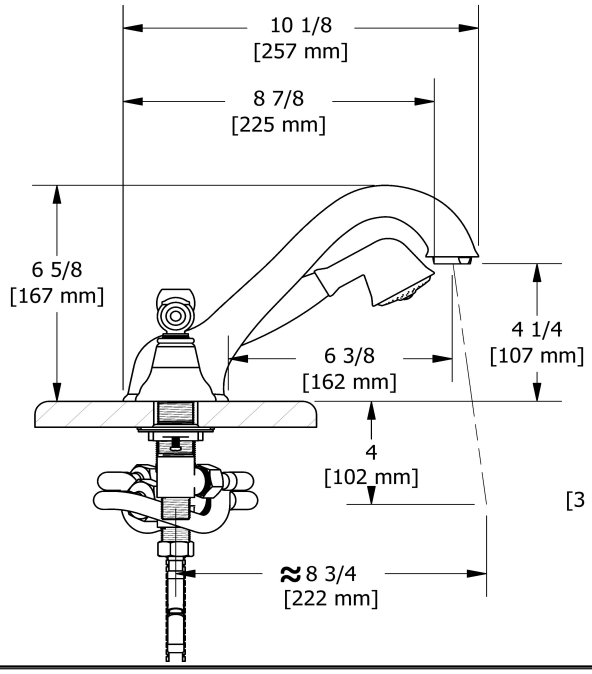

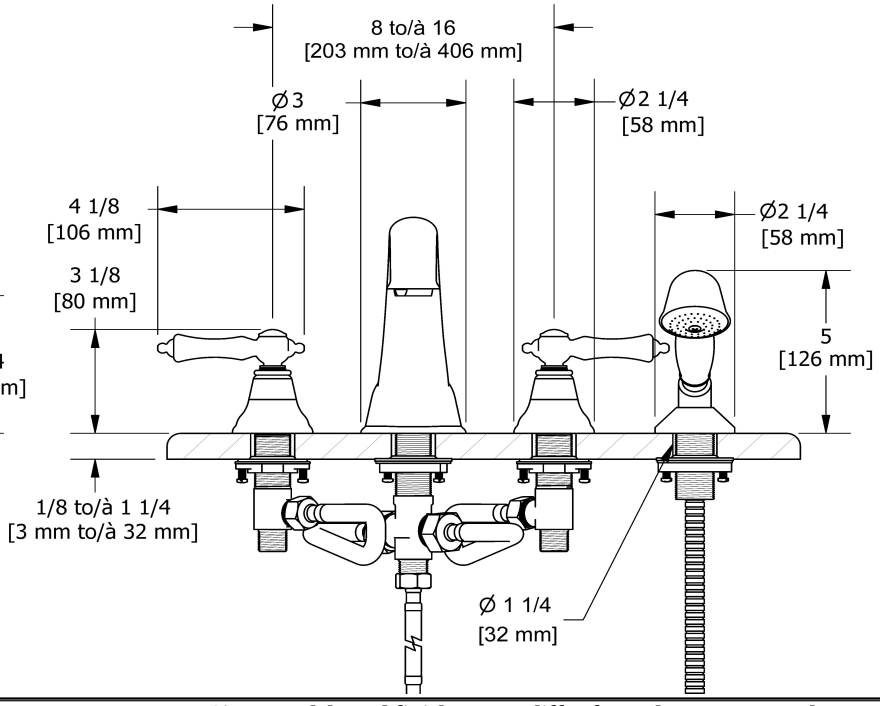

Sizes, models and finishes may differ from thoses presented.

Warranty

This **Riobel Inc.** product you have purchased carries a Limited Lifetime Warranty on the chrome, PVD finish, blacks and all working parts and is guaranteed from the initial purchase date against all manufacturing defects. All other finishes, including plastic components, are guaranteed for one year. All electric and/or electronic parts are covered by a 5-year limited warranty.

Customer Service

Ontario, West Canada : 888-287-5354 Quebec, Maritimes, United States : 866-473-8442

2020.06.11