Pfister

Arterra™

Adjustable Slide Bar Kit

LG16-3DEC Finish*(C)* ❑
LG16-3DED Finish*(D)* ❑
LG16-3DEK Finish*(K)* ❑
LG16-3DEY Finish*(Y)* ❑

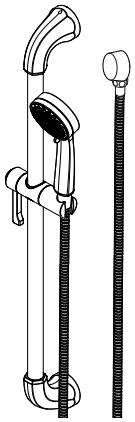

Specifications

Features

- 1.8 GPM Flow Rate
- 60" Metal Hose
- Multi Function Sprayhead (Champagne Spray, Full Spray, Full Spray/Massage Combo, Invigorating Spray, and Massage)
- Valve Not Included
- Pforever Warranty®

Code Compliance

Pfister products are designed and manufactured in compliance with the following standards and codes:

- IAPMO Certified
- CSA B125 Certified
- ASME A112.18.1
- Cal Green Compliant
- CEC Compliant
- EPA WaterSense Certification 1.8 gpm, 6.8 L/Min
- ADA Compliant-ANSI A117.1 (Lever handles only)
- ASME A112.18.3 (Backflow Prevention)

Dimensions

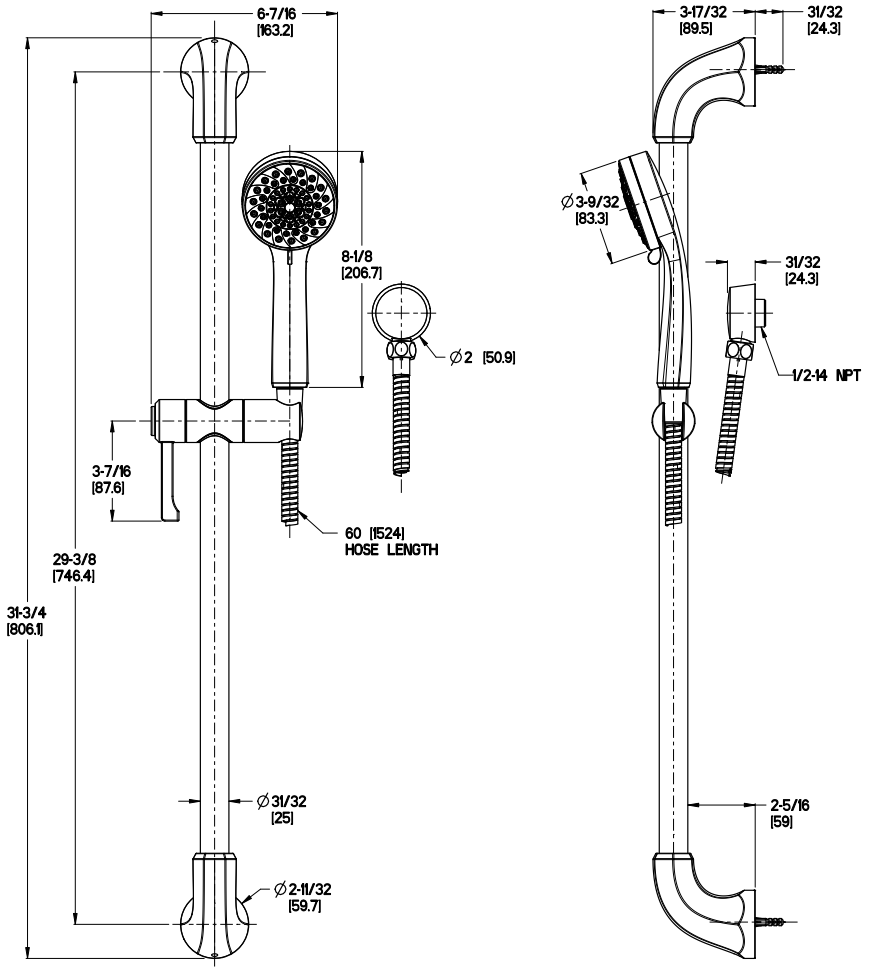

Copyright © 2017, Pfister Inc.