PHYLRICH®

Defining Luxury Since 1959

Wall Tub Set with Lever Handles

K1137

TECHNICAL DETAILS

ADA Compliance: Yes
Fitting Hole Diameter: 1 1/8"
Number of Holes: Three Hole
Number of Handles: Two
Handle Turn Angle: Quarter Turn
Spout Reach: 7 1/2 "
Installation Type: Wall Mounted
Primary Material: Brass
Valve Material: Ceramic
Flow Restriction: Full Flow
Water Pressure Maximum: 85 PSI
Water Pressure Minimum: 20 PSI
Water Pressure Recommended: 60 PSI

PRODUCT FEATURES

- Style: Baroque
- Collection: Ribbon & Reed
- Temperature Controlled By Handles
- Lever Handles

CODES & STANDARDS

ASME A112.181/ CSA B1251, ASME 112.18.2/ CSA B125.2, ANSI NSF, CEC, Watersense 61 Sect. 9, State of MA.

WARRANTY
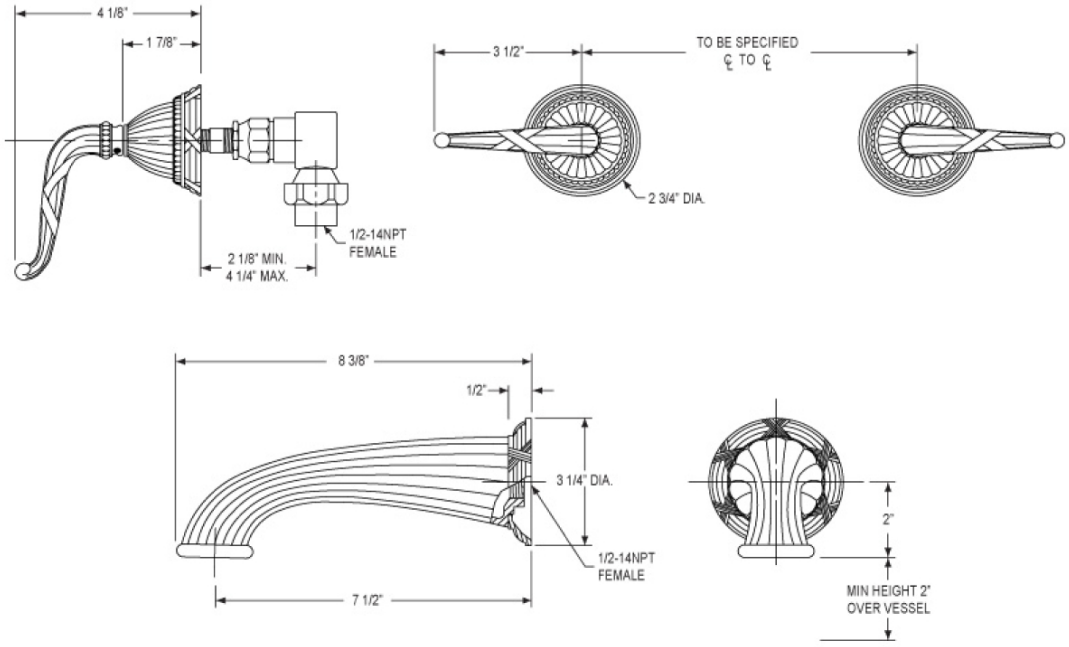
Mechanical Warranty: 10 Years from date of purchase.
Finish Warranty: See catalog for further information.