Produits Neptune

WIND

LEFT DRAIN

Bathtub

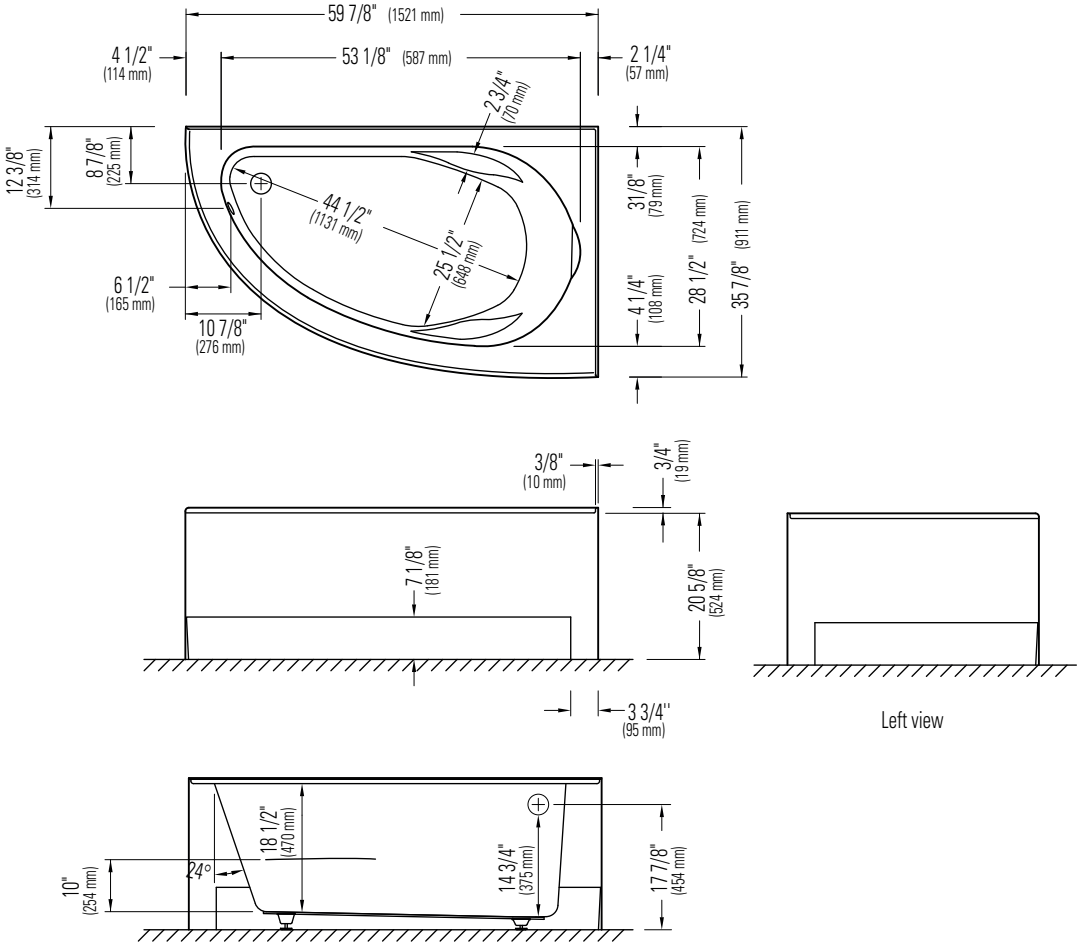

*A bathtub fitted with back jets can cause the pump to protrude by approximately 6'' from the overall dimension.

**All dimensions are approximate and subject to change without notice. Please refer to the installation guide before beginning the installation