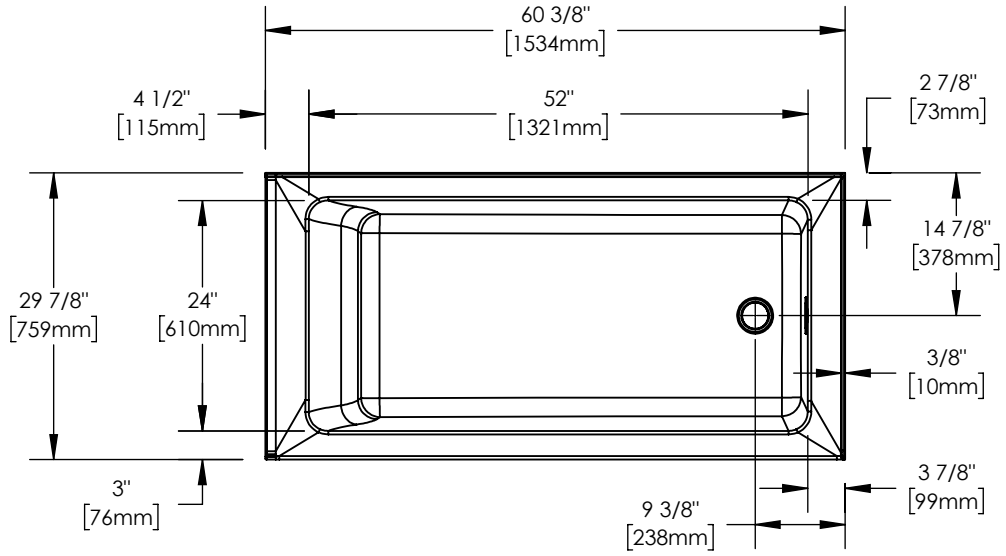

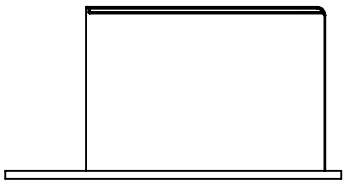

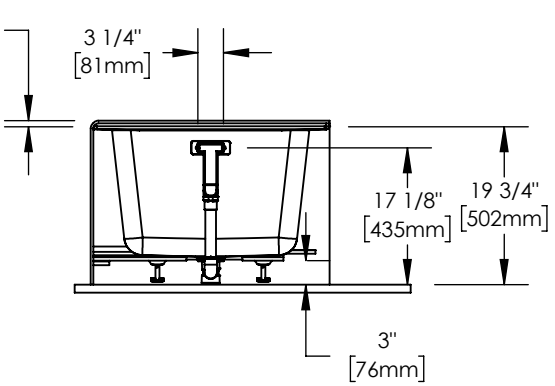

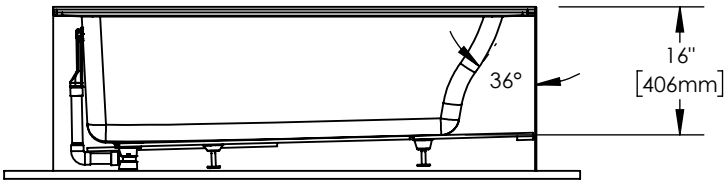

Wood support design may vary.
All dimensions are approximate.
Structure measurements must be verified against the unit to ensure proper fit.