BASE MODEL

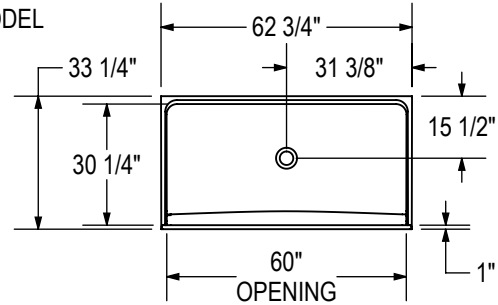

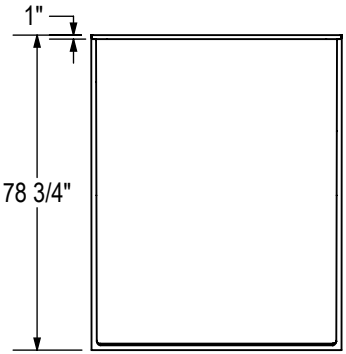

THRESHOLD DETAIL

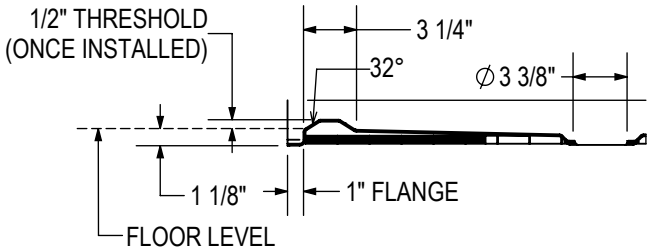

REINFORCEMENT BACKING

RIGHT WALL SHOWN
LEFT WALL SYMMETRICAL

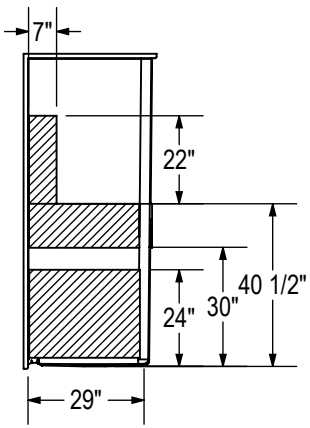

BACK WALL

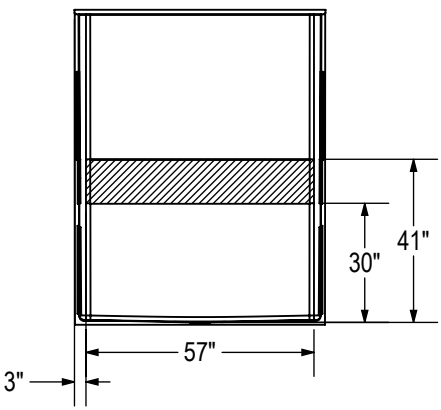

All dimensions are approximate. Structure measurements must be verified against the unit to ensure proper fit.