# OUTLOOK BASE 6030 C

## 31" X 60" X 3/4"

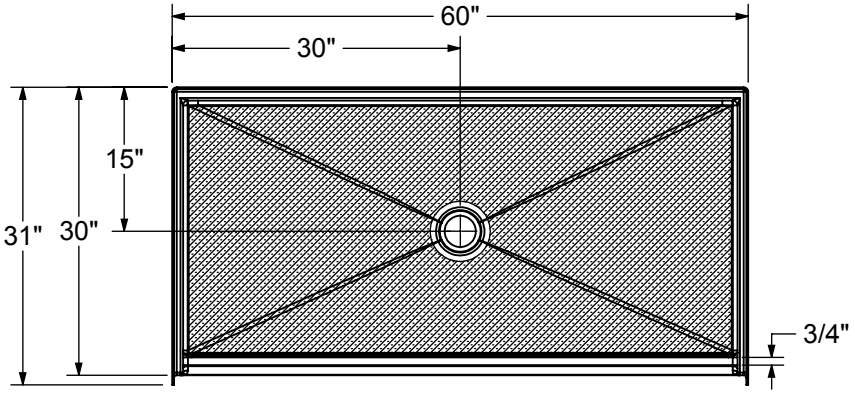


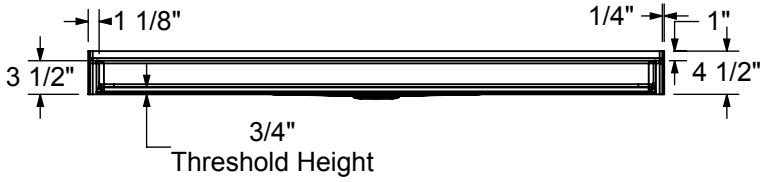


**THRESHOLD DETAIL**

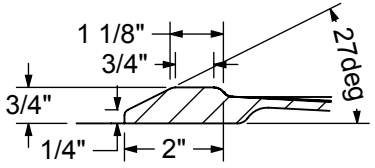


All dimensions are approximate. Structure measurements must be verified against the unit to ensure proper fit.