MOEN®

Specifications

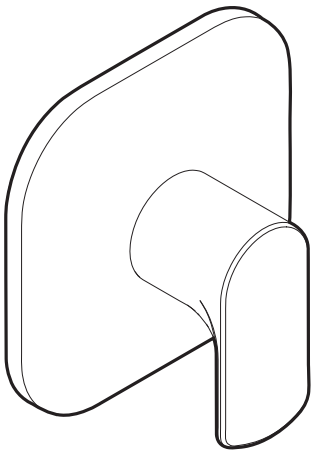

RIZON™

M-CORE™ Transfer Valve Trim Kit

Models: UT2081 series

Valve: U231 series or U361 series valves

DESCRIPTION
- ADA compliant operation
- Metal construction with various finishes identified by suffix

OPERATION
- Lever style handle
- Detents at each flow position
- Rotary 360° handle operation when used with 3 showering devices
- Rotary 120° handle operation when used with 2 showering devices

STANDARDS
- Third party certified to meet ASME A112.18/CSA B125.1 and all applicable requirements therein
- **ADA** for lever handle

WARRANTY
- Lifetime limited warranty against leaks, drips and finish defects to the original homeowner
- 10 year limited warranty when used in a multifamily installation
- 5 year limited warranty when used in a commercial installation

Visit www.moen.com/support for complete details and limitations

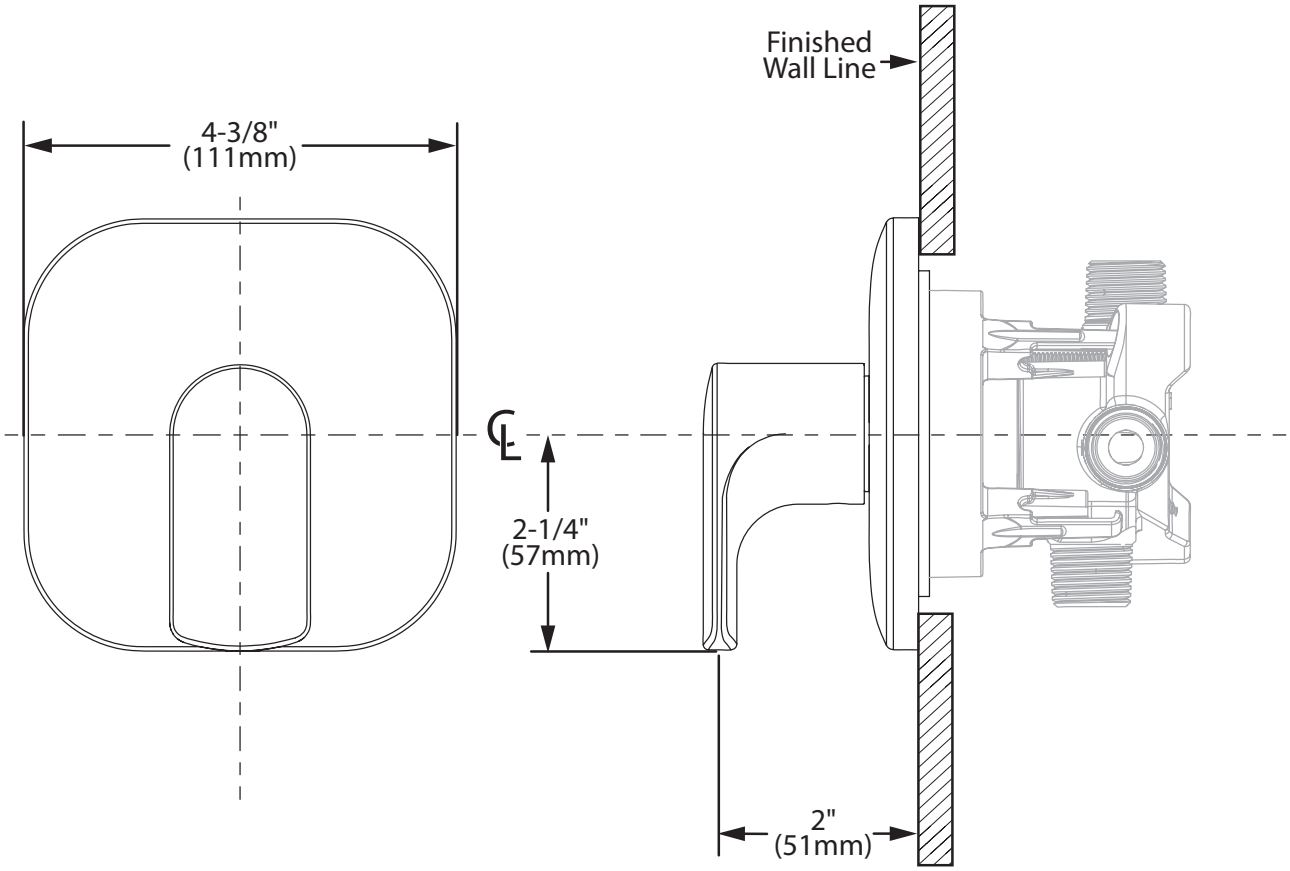

CRITICAL DIMENSIONS

(DO NOT SCALE)

FOR MORE INFORMATION CALL: 1-800-BUY-MOEN
www.moen.com

05/27/2020 SPC-14692 500000485572 Released 01