PRO-FIT® AIR MASSAGE BATH
4268 OV CD 68” x 42" x 20"
Model number: 6428C

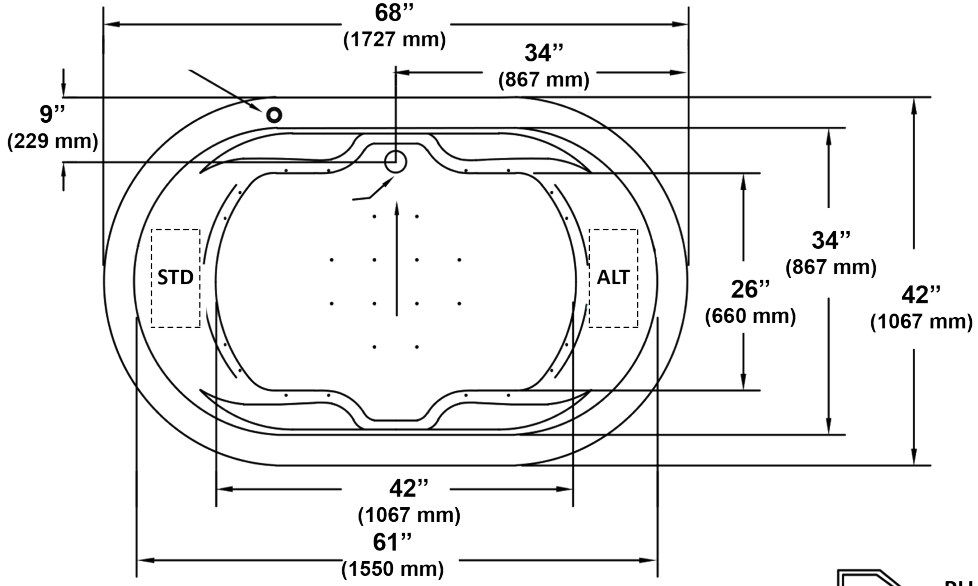

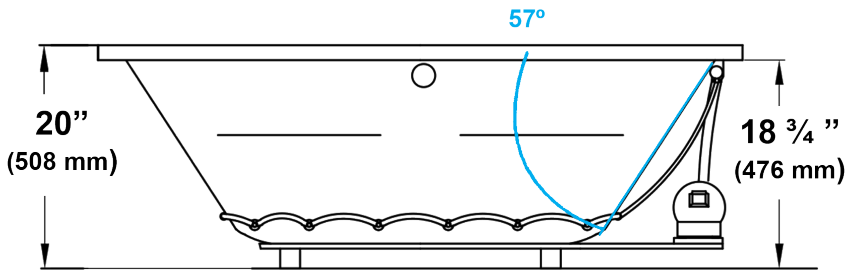

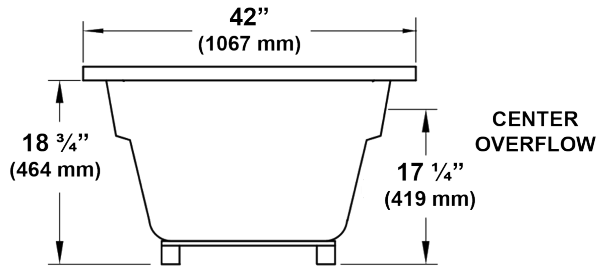

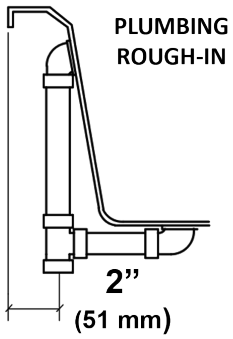

NOTES:
1. Blower locations shown for clarity. STD - Standard location; ALT - Alternate location
2. Required blower motor access is 20” W x 15” H.
3. Measurements may vary ¼” (+/-).
4. Optional removable apron is not available on this unit.
5. Installer note: Due to the freeform shape of the tub shell, it is recommended that the tub be on the job site before making the final cut-out for drop-in or undermount installation.

SPECIFICATIONS:			
Dimensions:	68” x 42” x 20"	**Number of air jets:**	30
Material:	Acrylic, fiberglass reinforced	**Weight:**	118 lbs. (54 kg)
Blower Motor:	120 V, 60 HZ, 8.0 Amp, Single Speed, 200 Watt Single Phase - Premounted	**Water Capacity:**	74 gals max., 59 gals min. (281 liters/224 liters)
Electrical Requirements:	120 V, 15 Amp, GFCI Protected	**Floor Loading:**	47 lbs./sq.ft. (229 kg/m^2)
On/Off Control:	Air Switch	**Shipping Weight:**	158 lbs. (72 kg)