MAIDSTONE

www.MaidstoneSupply.com

Bridge Style Kitchen Faucet

Part No: 121-DSBW1-4

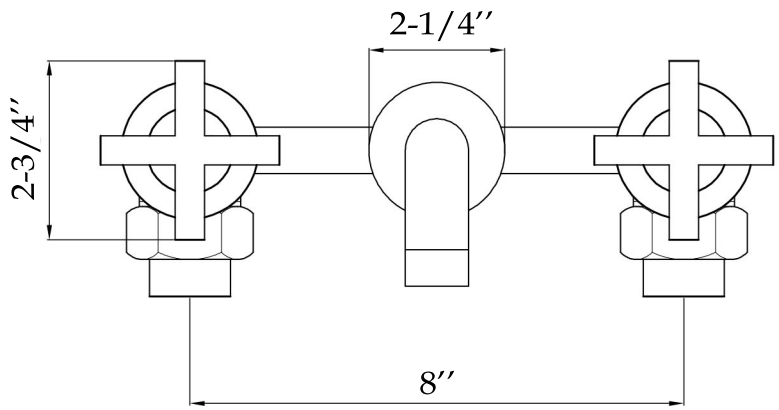

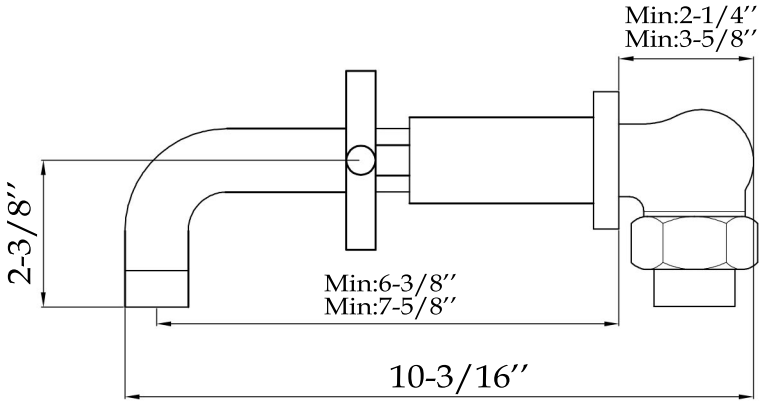

Contact Maidstone for additional information and specifictaions. For complete warranty information and a list of dealers visit www.MaidstoneSupply.com. All products and specifications are subject to change without notice. Maidstone is not responsible for typographical and/or dimensional errors. Typographical errors are subject to correction.