MAIDSTONE

www.MaidstoneSupply.com

Freestanding Tub

Part No: 33T89

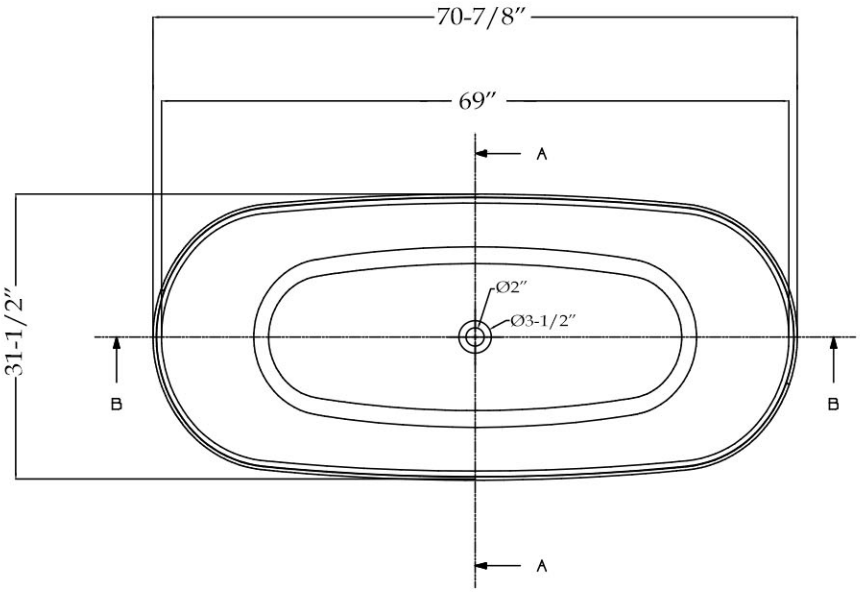

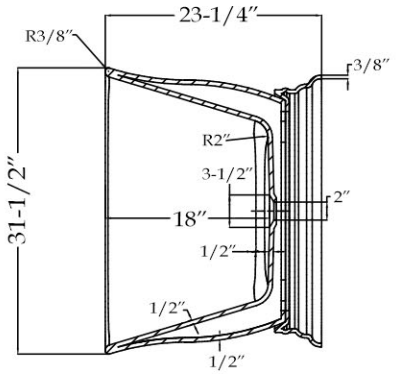

SECTION A-A

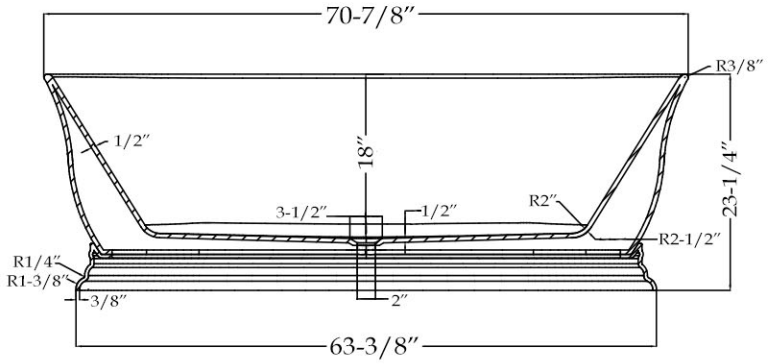

SECTION B-B

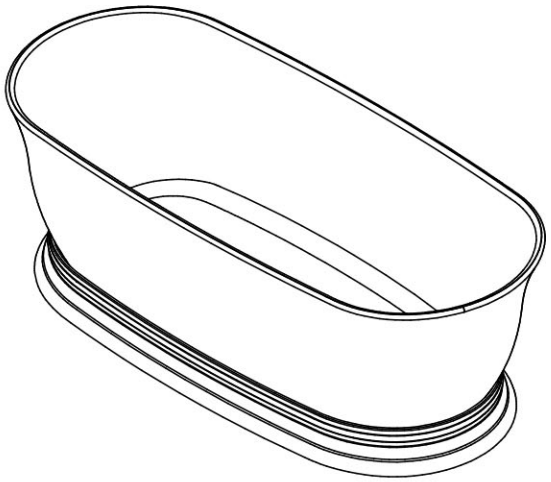

Contact Maidstone for additional information and specifictaions. For complete warranty information and a list of dealers visit www.MaidstoneSupply.com. All products and specifications are subject to change without notice. Maidstone is not responsible for typographical and/or dimensional errors. Typographical errors are subject to correction.

Note: Rough-in dimensions may vary +/- 1/2″ and are subject to change. No responsibility is assumed by Maidstone.