Zero Radius Double Bowl Kitchen Sink

Product Specifications

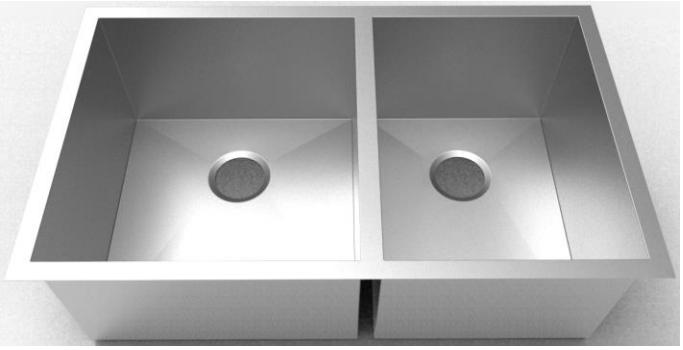

LXZD3219

Features

- 16 Gauge
- Type 304 Stainless Steel
- Includes Mounting Clips
- Fully Undercoated
- Sound Absorption Pads
- Brushed Satin Finish

Overall Size: 33" x 19"
Bowl Depth: 10" (left); 10" (right)
Minimum Cabinet Size: 36"
Drain Opening: 3-1/2"
Drain Placement: Center Rear
USE SINK AS CUTOUT TEMPLATE

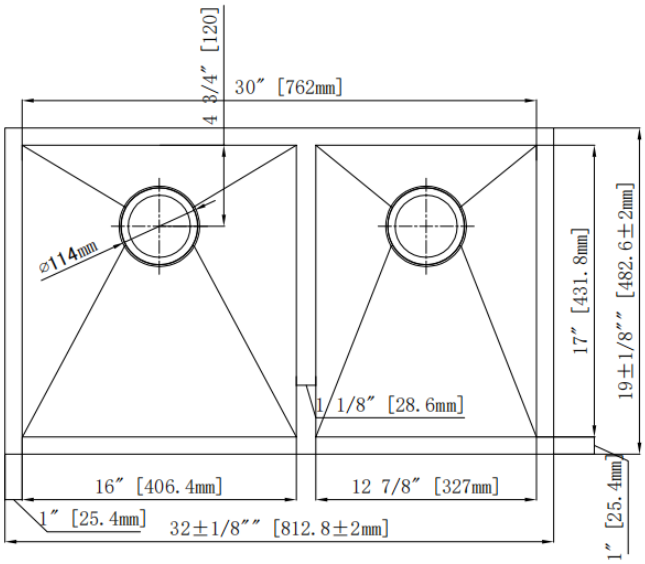

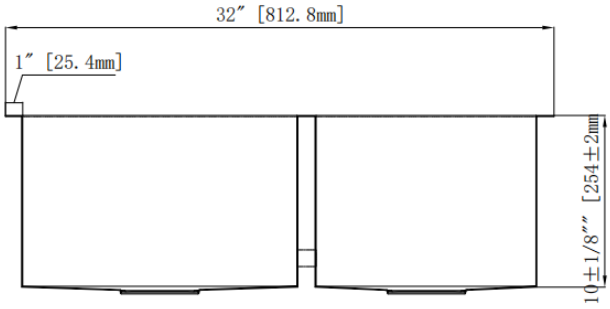

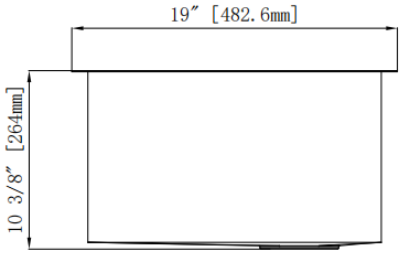

Optional Accessories

- Bottom Basin Rack: LXZD3219BG
- Basket Strainer: MLL7, ML18, ML14, ML15
- Soap Dispenser: CSD, LCSD, LGLSD

For cutout measurement: Use sink in sink box.

All dimensions listed are nominal. Luxart® reserves the right to make product and material changes at any time without notice.

Contact your sales representative for more information or visit our website at luxartcollection.com

Revised 3/19/2020