LENOVA

4580 W Roosevelt Rd Hillside, IL 60162 www.Lenovasinks.com Phone: 877-733-1098

SPECIFICATIONS MODEL SS-0Ri-S3

GENERAL
Fine quality sink formed of heavy duty 16 gauge, type 304 nickel bearing stainless steel.

DESIGN FEATURES
Bowl depth 10òwith inside bowl dimensions 16òX21ò and over all 22-1/2òX 17-1/2ò
Finish: Inside bowl surfaces polished to a uniform satin finish.
Underside: High density sound absorption pads covered with a thick rubberized insulation layer on all bottom surfaces.

Other: Drain opening 3 İ ò

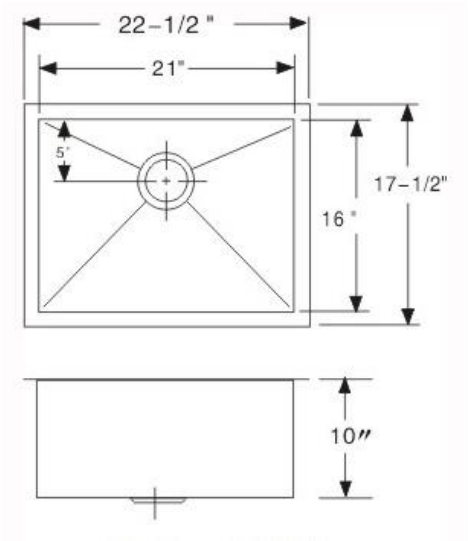

CUPC certified

Minimum cabinet size 24ò
Product shall be specified as SS-0Ri-S3

A-SS-01

A-SS-02

OPTIONAL ACCESSORIES:
Sink Drain: A-SS-01, A-SS-02
Stainless Steel Grids: G0S3
Bamboo Cutting Board: A-CB-01

A-CB-01

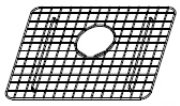

GOS3

Warranty:

Limited Life Time warranty against manufacturer defects and craftsmanship.

Codes/Standards Applicable:

ASME A112.19.3/CSA B45.4
*Template and mounting clips are packed with every sink