LACAVA

LUCE
vanity-top or vessel sink
5101LH/5101RH

Specifications:

Installation:	Vanity-top or vessel
Exterior Dimensions:	32”w x 18”d x 3”h
Material:	Solid surface
Weight:	Matte white - 30 lbs Gloss white - 34 lbs
Overflow:	Yes
Finishes:	001M - Matte white 001G - Gloss white
Faucet Holes:	00 - no hole 01 - one centered hole 02 - two hole - center and right, 4” spread 03 - three hole, 8” spread
Cut-out Size:	10” x 8” (template available upon request)
Faucet Hole Size:	Ø 1 3/8”
Drain Hole Size:	Ø 1 3/4”

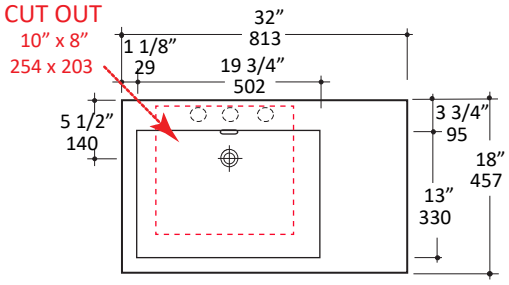

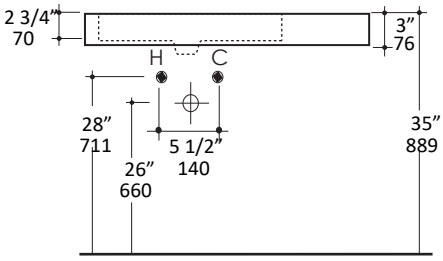

Features:

- Solid surface sink with overflow
- Most standard American drains can also be used
- Glazed back
- Unglazed bottom
- Material is heat, stain, scratch, chemical, and impact resistant
- Current cut-out template can be requested
- 5101LH - sink on the left
- 5101RH - sink on the right

Codes + Standards:

- Meets and exceeds applicable national codes and standards

ADA compliant when installed to specific requirements of this regulation

Recommended Items:

- Furniture
  - LUC-W-32 - Wall-mounted undercounter vanity with largewood pull on single drawer
  - LIB-W-32L/LIB-W-32R - ADA compliant wall-mounted undercounter vanity with two swing doors, two open cubbies, and accent light with ADA compliant switch
- European drain with overflow
  - 7100-12 pop up drain
  - 7100-13OF grid drain
  - 7100-16OF click-clack drain

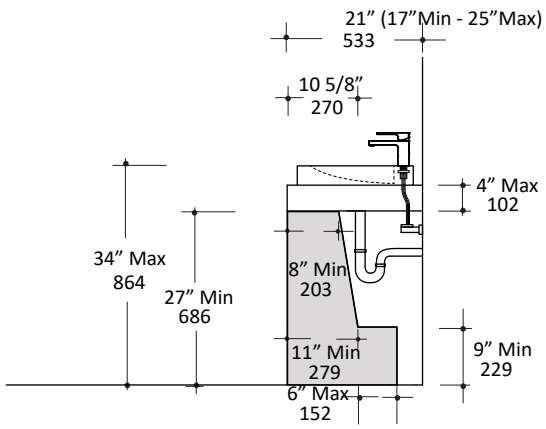

Recommended ADA Installation

LACAVA reserves the right to revise any dimension or information on this sheet without notice. Dimensions are nominal and may vary within an industry accepted tolerance of 1/4”.
Drawings provided herein are meant to give the user an idea of the product and are not made to scale.
Revised: 8/12/2019