# LACAVA

# KUBISTA
built-in stop valve
# 14ST.S.S-CC/CL

## Specifications:

| | |
|---|---|
| **Installation:** | built-in wall mount |
| **Exterior Dimensions:** | W: 2 3/4” H: 2 3/4” |
| **Material:** | solid brass construction ceramic cartridge |
| **Water use:** | 12 GPM (43.5 PSI) |
| **Finishes:** | CR - polished chrome<br>NI - brushed nickel |
| **Fittings included:** | Rough-in # VST-CL or VST-CC and trim # 14ST.S.S-A |

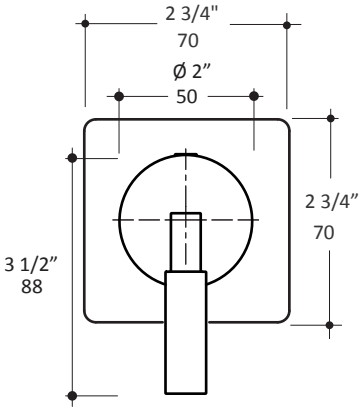


## Features:

- stop valve
- square backplate
- stick handle
- opens clockwise VST-CL or counterclockwise VST-CC (standard)
- volume valve with 90$^{o}$ rotating angle
- 3/4” NPT water IN and OUT connections
- 1” extension kit available

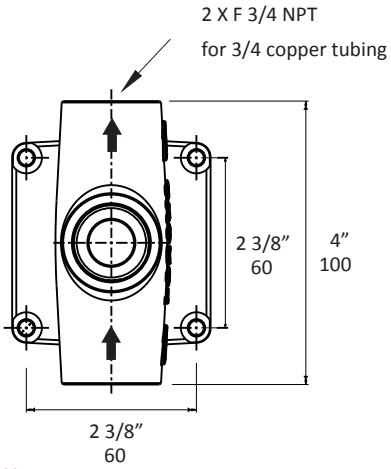


## Codes + Standards:

- Meets and exceeds applicable national codes and standards
- CAL-Green compliant

ADA compliant when installed to specific requirements of this regulation

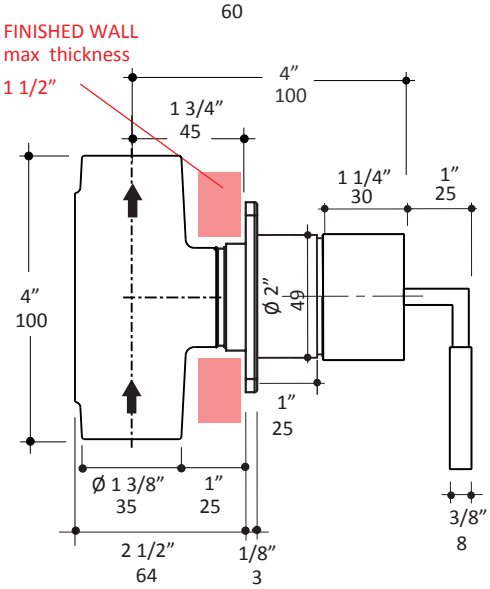


## Recommended Items:

- Replacement parts:
  - VST rough-in
  - 14ST.S.S-A trim
  - VST-C ceramic cartridge
  - VST-EX 1” extension kit

LACAVA reserves the right to revise any dimension or information on this sheet without notice. Dimensions are nominal and may vary within an industry accepted tolerance of 1/4”. Drawings provided herein are meant to give the user an idea of the product and are not made to scale. Location of plumbing is meant for reference, your specific application may vary.
Revised: 02/16/2024