Synthos™ | K-34542-PAP

Four-piece workstation sink accessory set

Features

- For use with Synthos kitchen sinks
- Box includes: Cutting board, garnish bowl set, prep bowl set, and colander
- Set includes three individual prep bowls with lids and tray
- Each prep bowl holds 20.5 ounces
- Set includes four individual garnish bowls with lids and tray
- Each garnish bowl holds 7.9 ounces

Available Colors/Finishes

Color tiles intended for reference only.

NA NA Not Applicable

1-800-4KOHLER (1-800-456-4537)
Kohler Co. reserves the right to make revisions without notice to product specifications.
For the most current specification sheet, go to www.kohler.com USA or www.kohler.ca Canada.
6-29-2026 21:15 - US-CA

Codes/Standards

None Applicable

Material

- Paper composite
- Stainless steel and lead-free crystal glass construction

Warranty

See website for detailed warranty information.

KOHLER® One-Year Limited Warranty

1-800-4KOHLER (1-800-456-4537)
Kohler Co. reserves the right to make revisions without notice to product specifications.
For the most current specification sheet, go to www.kohler.com USA or www.kohler.ca Canada.
6-29-2026 21:15 - US-CA

THE BOLD LOOK OF KOHLER

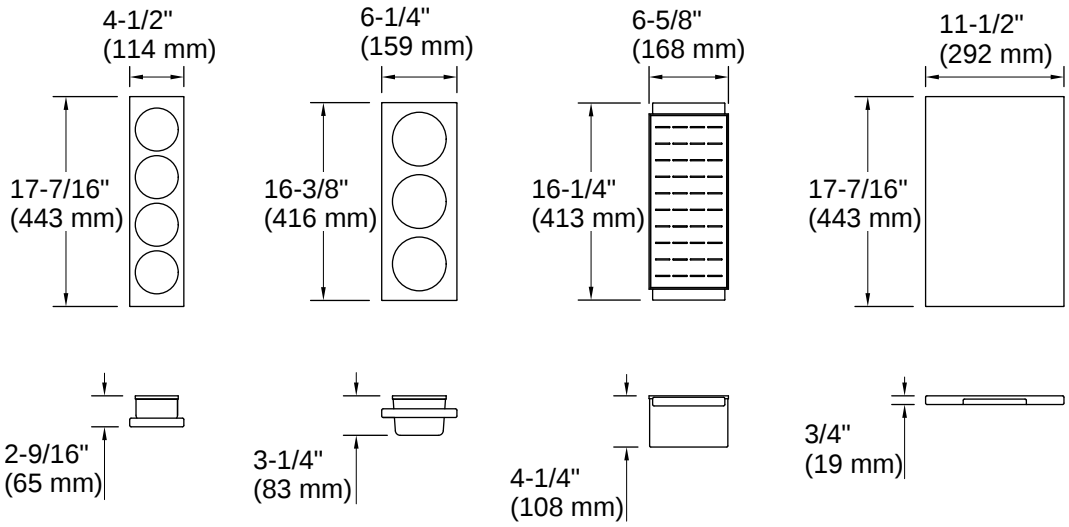

Installation Notes

Install this product according to the installation instructions.

1-800-4KOHLER (1-800-456-4537)
Kohler Co. reserves the right to make revisions without notice to product specifications.
For the most current specification sheet, go to www.kohler.com USA or www.kohler.ca Canada.
6-29-2026 21:15 - US-CA

THE BOLD LOOK OF KOHLER