Kalia
ONCE UPON A TIME...WATER®

GRAFIK™

BF1608
CalGreen 3-way 1/2” diverter and Decorative Trim

SPECIFICATIONS

Features
- Solid brass construction
- No visible screw
- Male water inlet 1/2NPT threaded or welded
- Total adjustment of 19 mm (3/4”)
- Support for better stability during installation included
- Operates 1 component at a time

Colors (Finishes)
- Chrome : BF1608-**110**

Certifications
The specified model meets or exceeds the following standards;

Intertek WATER EFFICIENT CSA B125.1 ASME A112.18.1 ICC A117.1

Packaging
- **Dimensions** :
  315 mm x 125 mm x 115 mm
  (12 ⅜” x 4 ⅞” x 4 ½”)
- **Volume**: 0.004 cu m (0.16 cu ft)
- **Total weight**: 1.22 kg (2.69 lb)

Maximum flow rate
- 1 outlet: 22 liters/min.
  (5.8 gallons/min.) at 60 psi

Installation Notes
This product must be installed following the installation instructions provided.

WARRANTY
Kalia Inc. guarantees all aspects of its products to be free of defects in material and workmanship for normal residential use. **Refer to the warranty included with the Kalia products for details**.

Product dimensions:

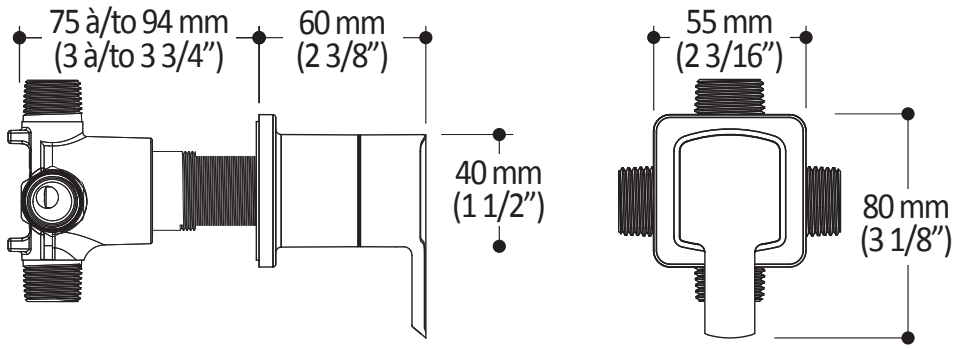

Configuration 3 voies (CalGreen)

3-way configuration (CalGreen)

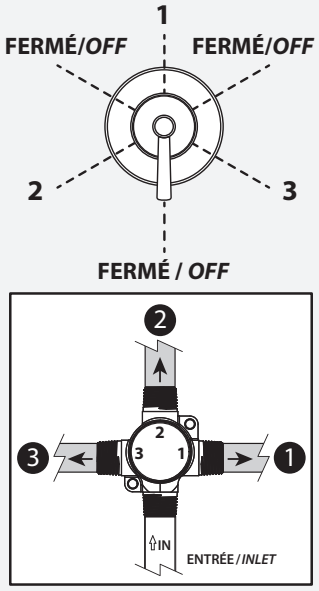

Important: Dimensions are approximated and are subject to changes. Please refer to the installation instructions.

Kalia
ONCE UPON A TIME...WATER®

1355, 2nd Street, Industrial Park
Sainte-Marie (Québec)
Canada G6E 1G9

T 418-387-9090
1-877-GO-KALIA (1-87- 465-2542)
F 418 387-9089

KaliaStyle.com