KS8020,1,2,3,5,6,7,8DKL
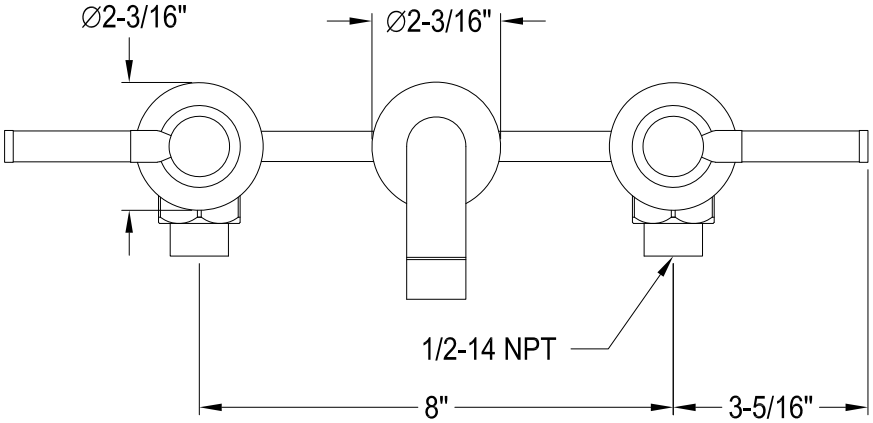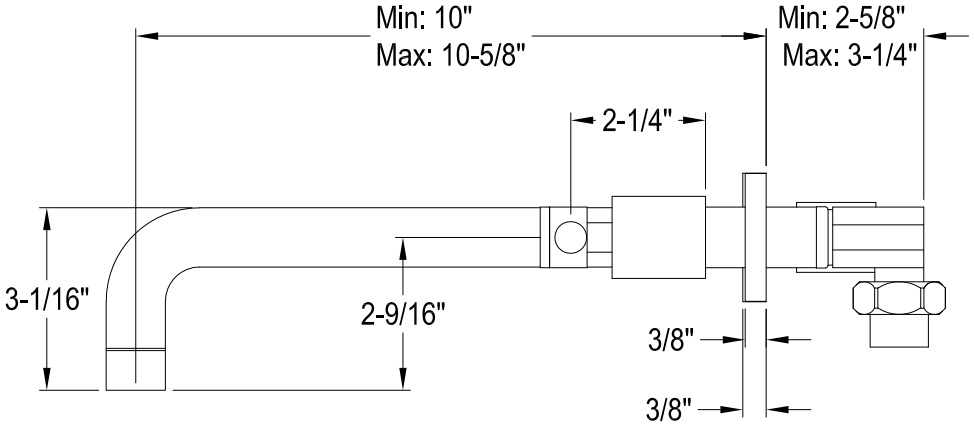
Twin Handles Wall Mount Tub Filler