KB531,2,8
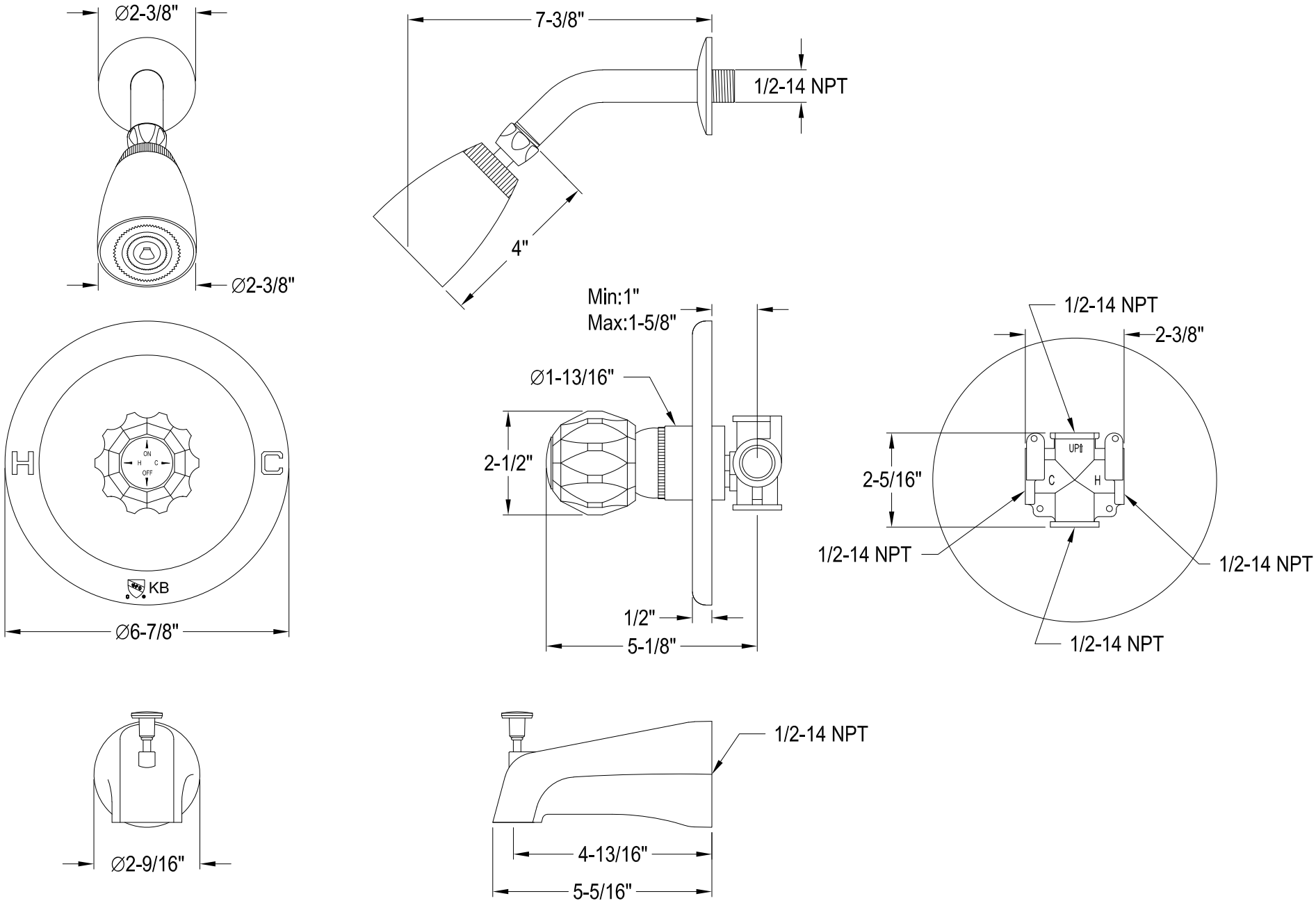
Single Handle Tub & Shower Faucet