KS1341,2,5,8AL
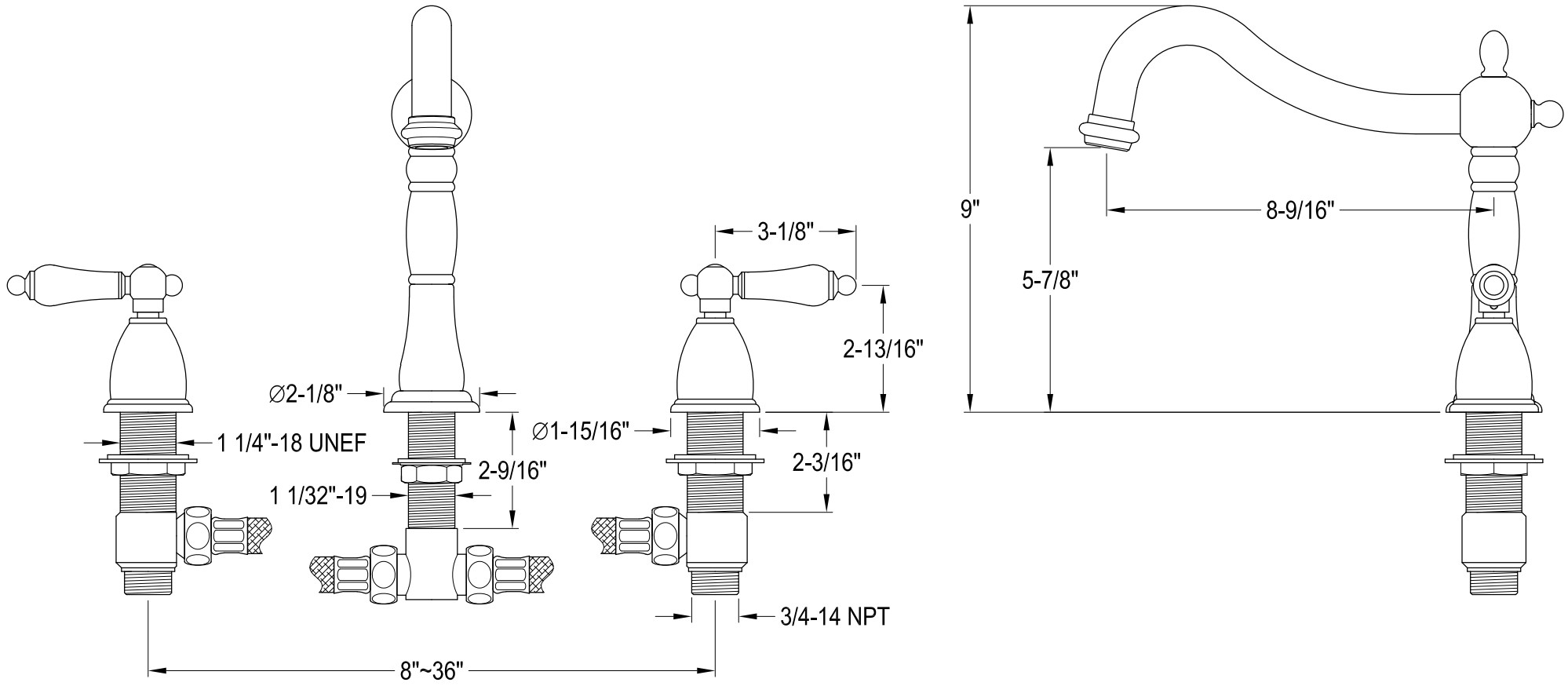
Roman Tub Filler