CC44450,1,2,5,7,8X
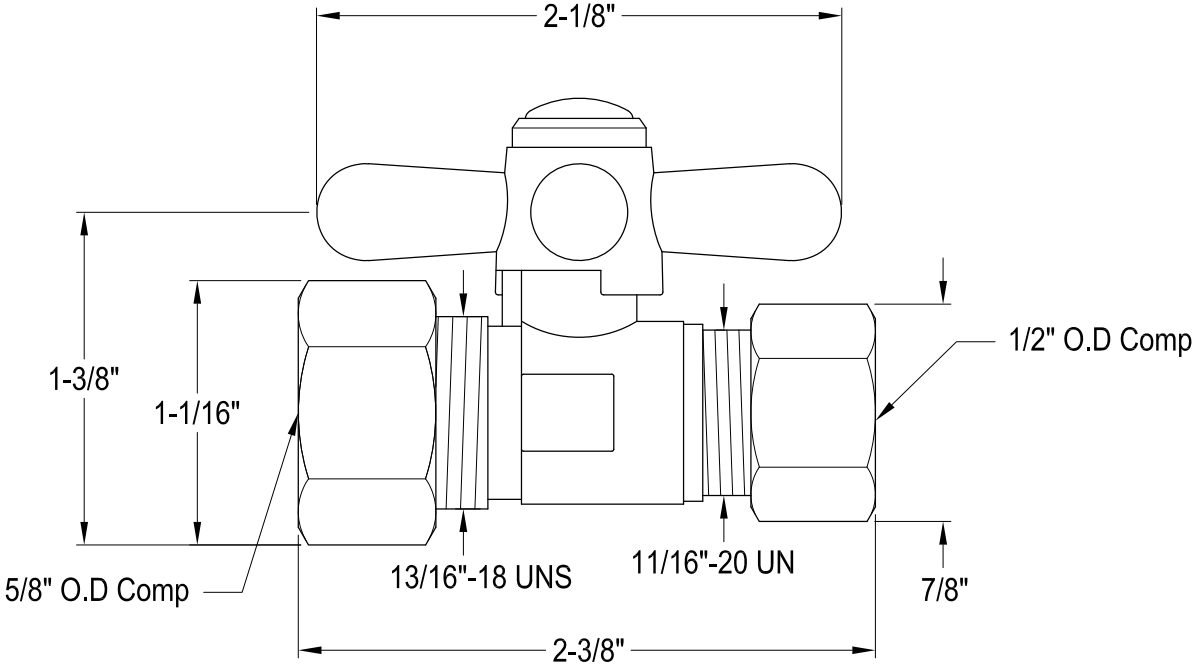
Quarter Turn Valves, 5/8" O.D Comp x 1/2" O.D Comp