Rectangle Plate with Contempo Slim Lever Thermostatic Valve with Contempo Slim Cross Built-in 2-Way Or 3-Way Diverter/Volume Controls (J-TH34-686 / J-TH34-687 / J-TH34-688 / J-TH34-689)

Model #: T7358-TRIM-

JACLO®
Confidence from start to finish.™

FEATURES:

- All brass construction
- Bottom Trim handle contains temperature indicator in Fahrenheit so user can set water to desired temperature with no need to adjust further
- Top Trim handle turns the water on and off, controls the volume of the water, and diverts the water
- Requires rough valve J-TH34-686 for 2 functions, J-TH34-688 for 3 functions, J-TH34-687 for 2 shared functions, or J-TH34-689 for 3 shared functions
- For clear visual of Cross handles with hub/no hub on T7361-TRIM; T7358-TRIM; T7549-TRIM see corresponding Volume Control Trim section or see spec info on JACLO.com

AVAILABLE FINISHES:

Polished Chrome (PCH)	Satin Chrome (SC)	Bronze Umber (BU)
Satin Nickel (SN)	Pewter (PEW)	Caramel Bronze (CB)
Polished Nickel (PN)	Antique Brass (AB)	Antique Copper (ACU)
Oil-Rubbed Bronze (ORB)	Polished Brass (PB)	Polished Copper (PCU)
Vintage Bronze (VB)	Satin Brass (SB)	Matte Black (MBK)
Satin Gold (SG)	Polished Gold (PG)	Black Nickel (BKN)
White (WH)	Unlacquered Brass (ULB)	Satin Cooper (SCU)
Almond (ALD)	Amber (AMB)	Azure Blue (AZB)
Coral (COR)	Mint Green (GRN)	Stone Grey (GRY)
Lilac (LAC)	Light Blue (LBL)	Limon (LIM)
Plum (PLM)	Pink (PNK)	Red (RED)
Graphite (GPH)	Aged Unlacquered Brass (AUB)	
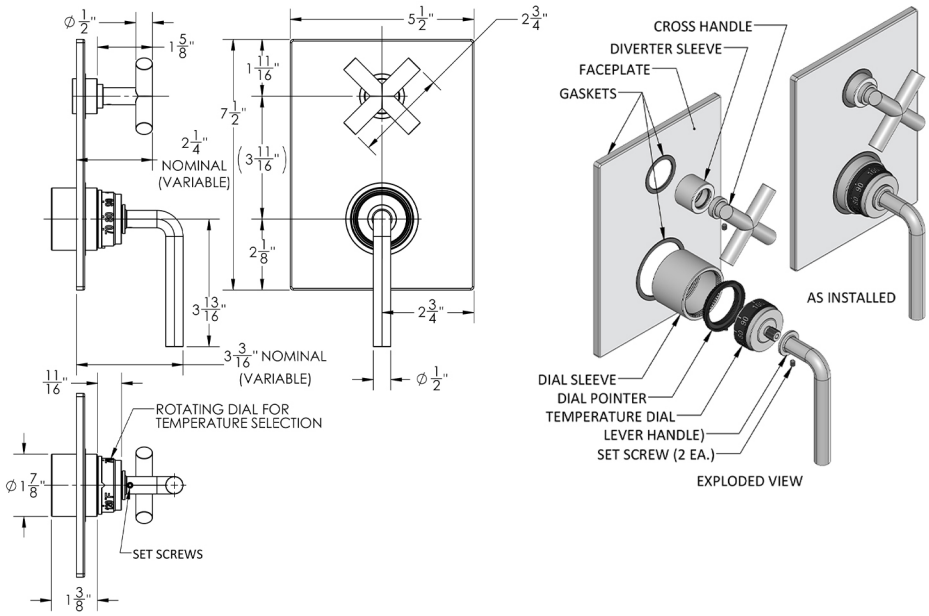
SPECIFICATION DRAWING: