Uptown Contempo Faucet with Round Escutcheons & Peg Lever Handles

Model #: 8880-T638-

JACLO
Confidence from start to finish.™

FEATURES:

- All brass 8" - 12" widespread faucet includes brass pop-up drain with overflow
- $^1/_4$ turn ceramic valves
- Swivel Spout (For Stationary Spout option, contact JACLO)
- Available Flow Rates: 1.5, 1.2 & 0.5 GPM. Additional flow rate (aerator) options available. Contact JACLO.
- 5 $^3/_4$" spout reach
- Spout Hole Size Min-Max: 1 $^1/_2$" - 1 $^7/_8$"
- Valve Hole Size Min-Max: 1 $^1/_8$" - 1 $^5/_8$"
- ADA Compliant Levers

AVAILABLE FINISHES:

Polished Chrome (PCH)	Satin Chrome (SC)	Bronze Umber (BU)
Satin Nickel (SN)	Pewter (PEW)	Caramel Bronze (CB)
Polished Nickel (PN)	Antique Brass (AB)	Antique Copper (ACU)
Oil-Rubbed Bronze (ORB)	Polished Brass (PB)	Polished Copper (PCU)
Vintage Bronze (VB)	Satin Brass (SB)	Matte Black (MBK)
Satin Gold (SG)	Polished Gold (PG)	Black Nickel (BKN)
Bombay Gold (BG)	Jewelers Gold (JG)	Europa Bronze (EB)
White (WH)	Sedona Beige (SDB)	Tristan Brass (TB)
Unlacquered Brass (ULB)	Satin Cooper (SCU)	

SPECIFICATION DRAWING:

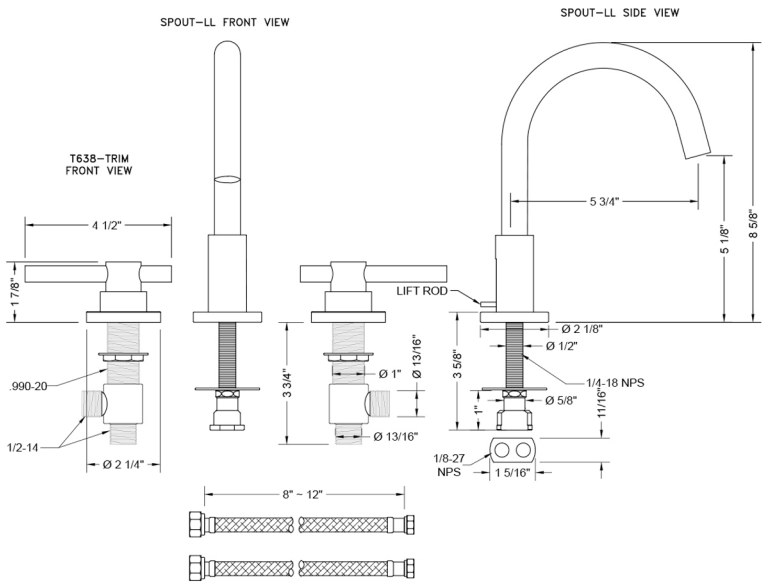

AVAILABLE HANDLES:

COMPLIANCES:

Complies with: ASME A112.18.1-2012/CSA B125.1-12