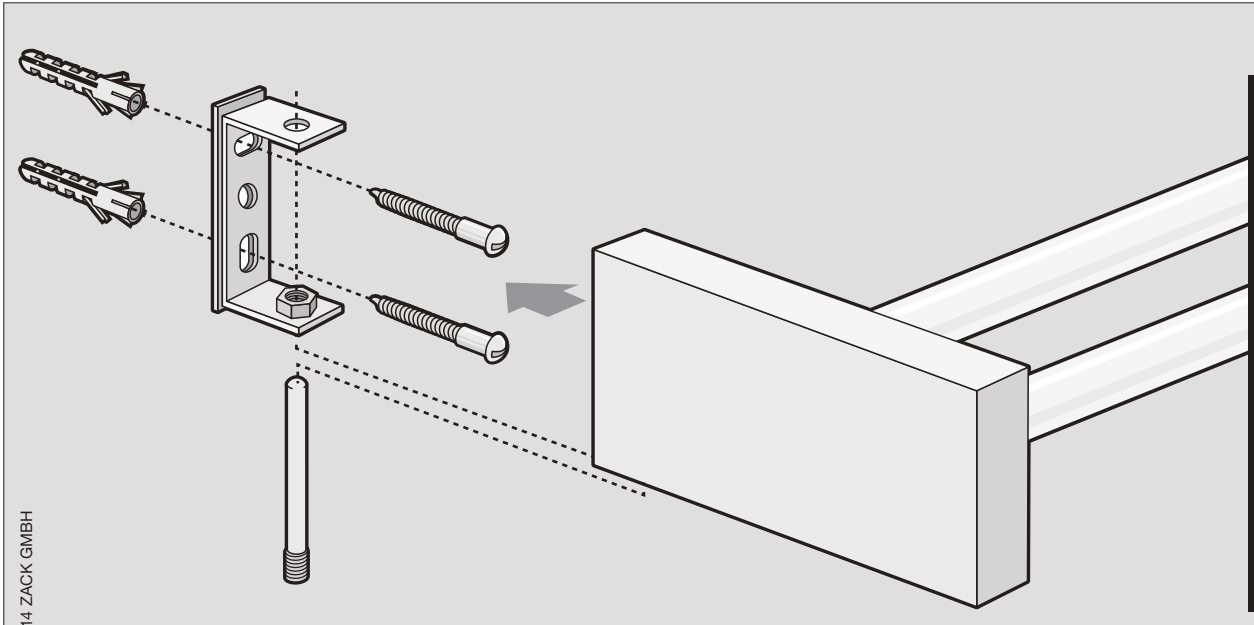

DOPPEL-HANDTUCH-STANGE

DOUBLE TOWEL RAIL

PORTE-SERVIETTES DOUBLE BARRE

FRESCO

40144

ZACK®

© 2014 ZACK GMBH