HUNTINGTON BRASS

# SPECIFICATION / BREAK DOWN

## K1102701, K1102729 - Drinking Faucet

### Description

- Lever handle
- Contemporary drinking faucet
- 360 deg swing angle, tubular spout
- 90 deg turn ceramic disc cartridges
- 1/4" NPSM connections
- California AB1953 compliant

### Standards

- Complies with IAPMO UPC/cUPC
- California AB1953 compliant
- ADA Accessibility Guidelines for Buildings and Facilities - 4.27.4 Controls and Mechanisms

### Colors / Finishes

**K1102701 - Chrome**
**K1102729 - Satin Nickel**

## BREAK DOWN

### Component Parts List

| No. | Description | Qty |
|---|---|---|
| 01 | Aerator assembly | 1 |
| 02 | Handle | 1 |
| 03 | Handle cap | 1 |
| 04 | Spout | 1 |
| 05 | O-rings | 2 |
| 06 | Faucet Body | 1 |
| 07 | Shank | 1 |
| 08 | Base ring | 1 |
| 09 | O-ring | 1 |
| 10 | Retaining ring | 1 |
| 11 | Retaining washer | 1 |
| 12 | Nut | 1 |
| 13 | Gasket | 1 |
| 14 | Nut | 1 |

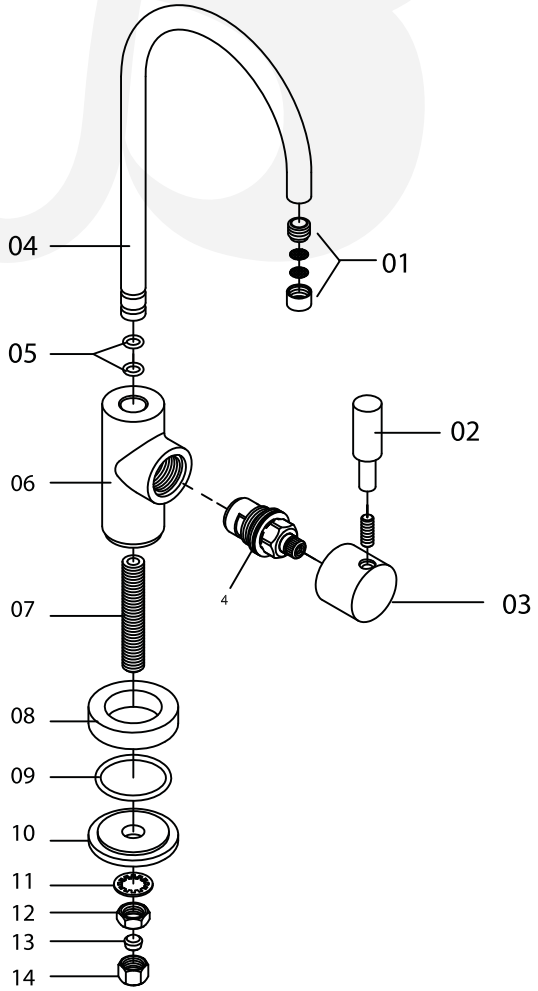

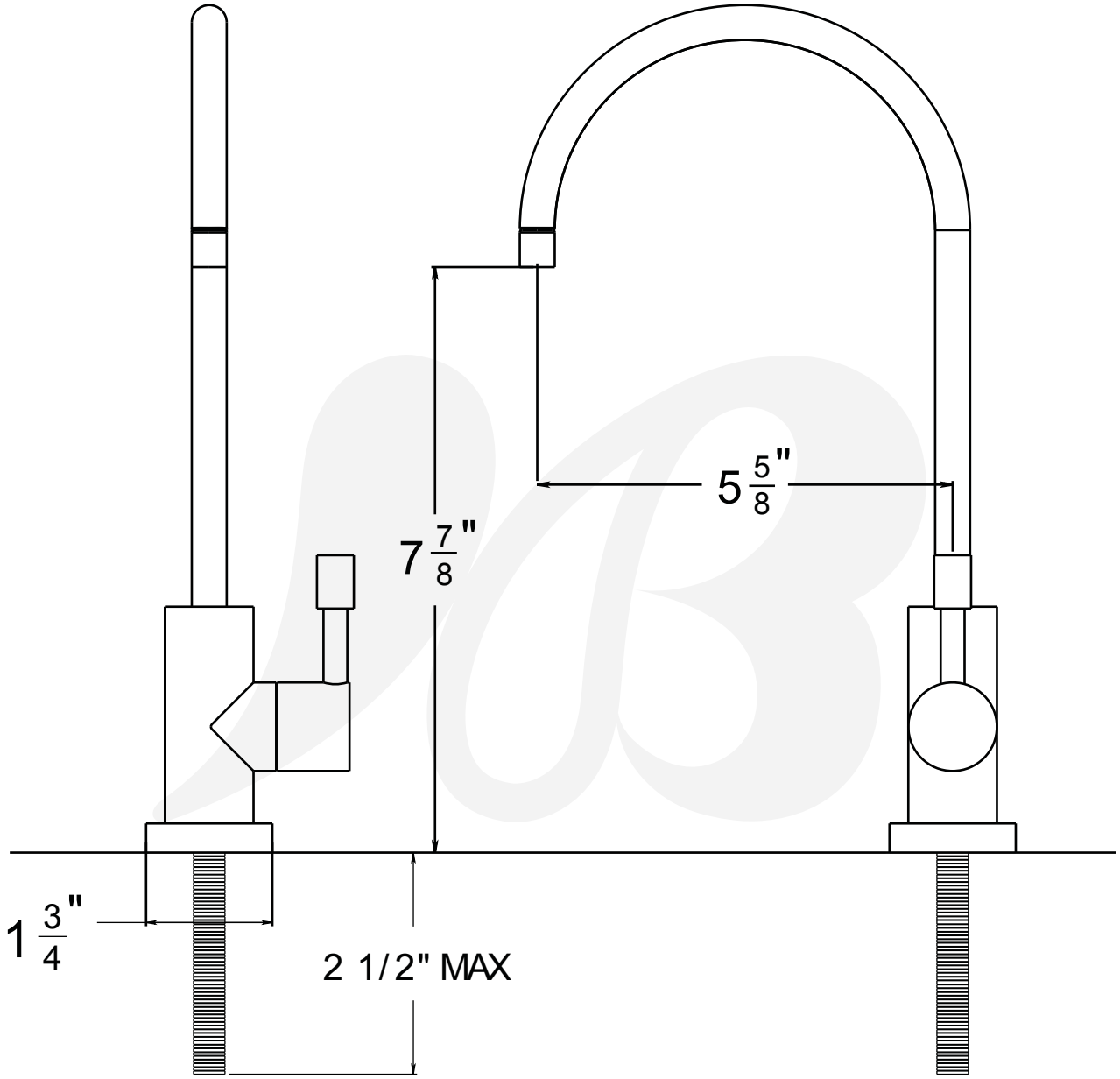


| Item Number | Type | Date |
|---|---|---|
| K1102701, K1102729 | DRINKING FAUCET | 3-23-2016 |