HUNTINGTON BRASS

SPECIFICATION / BREAK DOWN

P6380001-1, P6380029-1 Tub and Shower

Description

- Tub & shower trim kit
- "Reliaflo" metal lever handle
- 1 setting shower head
- 1.5 GPM ASME Compliant
- VALVE SOLD SEPARATELY
- Slip joint diverter tub spout

Standards

- Complies with IAPMO UPC/cUPC
- ADA Accessibility Guidelines for Buildings and Facilities - 4.27.4 Controls and Mechanisms
- CALGreen compliant
- EPA WaterSense Certified by IAPMO R&T
- California Energy Commission Listed

Colors / Finishes

P6380001-1 -Chrome
P6380029-1 -Satin Nickel

BREAK DOWN

NO.	Part No	Qty 12610	Qty 12634
01	CTCT0043	1	1
02	CTPB0470	1	1
03	ATBE0094	1	1
04	CTHZ0312	1	1
05	CCQT0002	1	1
06	CTST4101	1	1
07	CTCP0192	1	1
08	CTCT0053	1	1
09	CTST0230	2	2
10	CTCT0052	1	1
11	CTWP0223	1	1
12	CTWP0192	1	1
13	ATBF0135		1

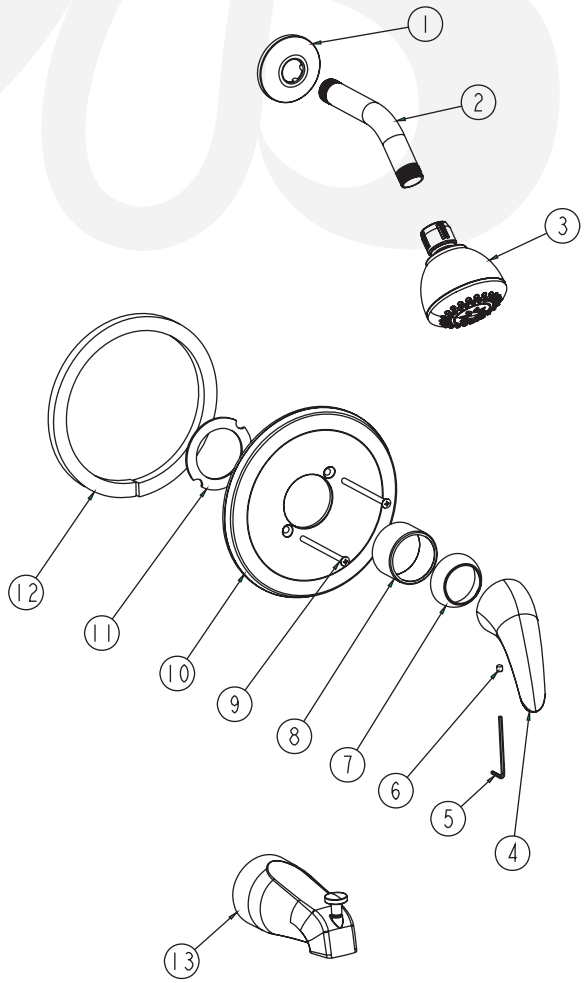

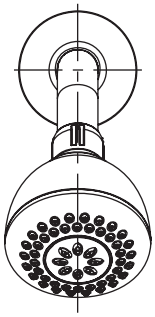

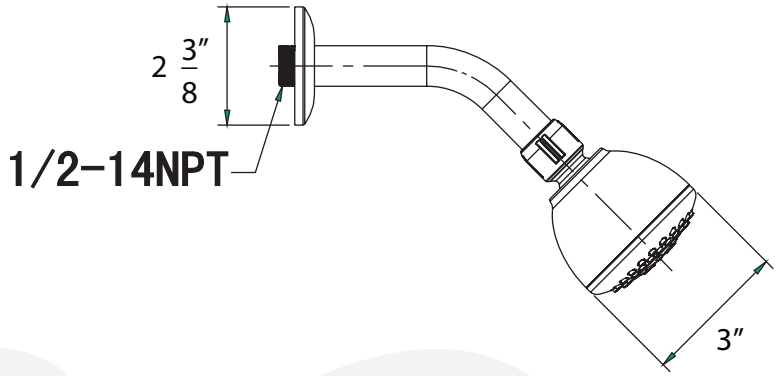

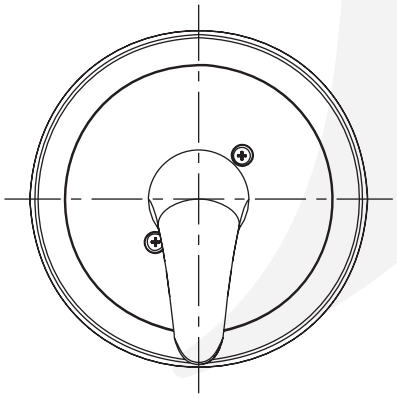

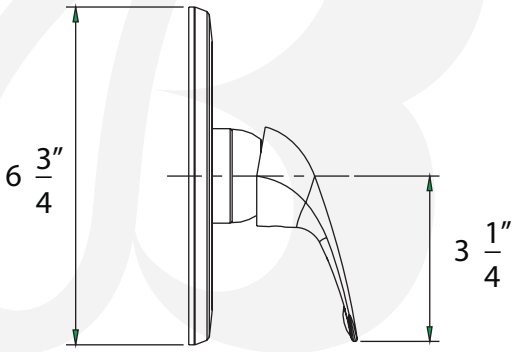

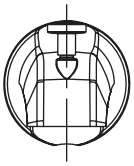

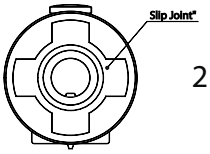

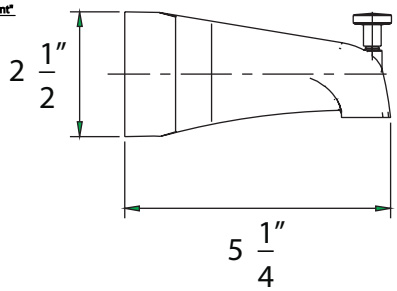

Item Number	Type	Date
6380001-1, 6380029-1	Tub and Shower	6-24-2021