hansgrohe

Allegro N
Prep Kitchen Faucet, 2-Spray Pull-Down, 1.75 GPM
Finish: **matte black** Part no. : **71844671**

Description

Features

- Swivel range 360°
- Laminar spray, needle spray, Shower spray pattern
- Toggle spray diverter
- MagFit magnetic sprayhead docking
- Deck mounted
- Max. flow: 1.75 GPM (6.6 L/Min)
- Ceramic cartridge
- ⅜" connections
- Integrated double backflow prevention
- Extension length up to 19 5/8" (50cm)
- Single lever kitchen mixer, connection hoses, Fastening set, Assembly instructions

Item details

List Price $ 778.00

Technology

EcoRight | Quick Clean | Mag Fit | Comfort Zone | Pull-out

Compliance / Sustainability

MAP | ADA | UPC

Product image
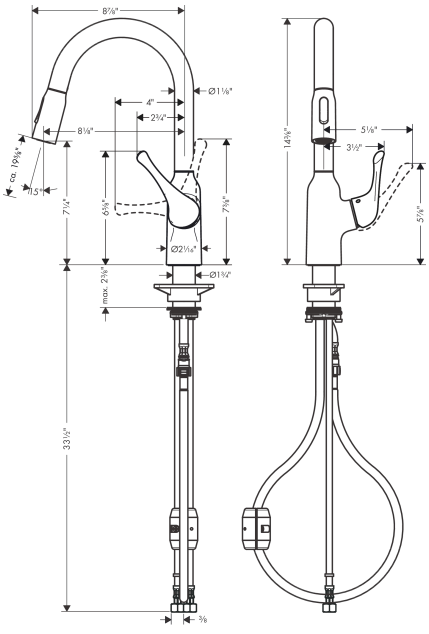
Scale drawing