FixFit S
Wall Outlet with Handshower Holder
Finish: **matte white** Part no. : **26888701**

Description

Features

- Consists of: Wall Outlet, Escutcheon
- Version: plastic housing with internal water supply made of plastic
- For all Hansgrohe hand showers
- Wall-mounted
- Connection type: ½" NPT, ¾" NPT

Item details

List Price	$ 202.00

Compliance / Sustainability

Product image
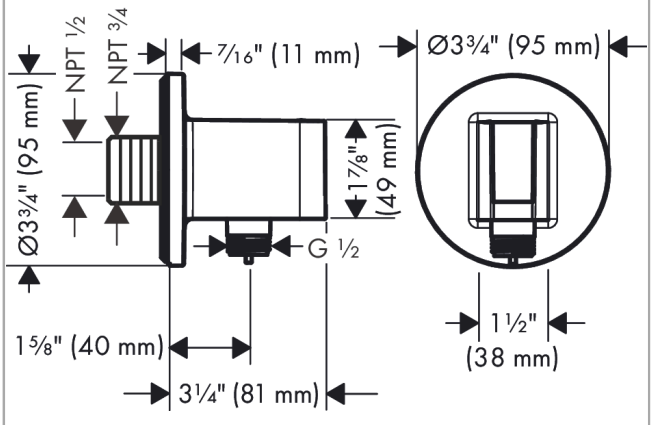
Scale drawing