hansgrohe

Vernis Blend
Pressure Balance Tub/Shower Set, 1.75 GPM
Finish: **matte black** Part no. : **04956670**

Description

Features

- Consists of: Showerhead, Showerarm, Pressure Balance Trim, Tub spout
- Spray modes: Rain
- Ball-joint: Showerhead angle adjustable
- Max. flow: 1.75 GPM (6.6 L/Min)

Item details

List Price	$ 744.00

Technology

EcoRight

XXL Performance

Compliance / Sustainability

WaterSense Meets EPA Criteria Certified by IAPMO R&T

UPC

Product image
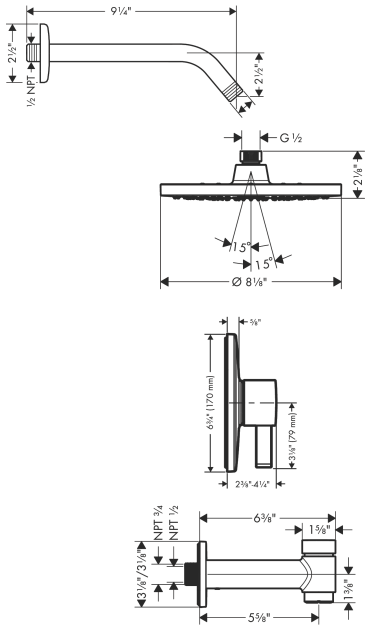
Scale drawing