hansgrohe

Pulsify Select S
Handshower Set 105 3-Jet, 2.5 GPM
Finish: **chrome** Part no. : **04917000**

Description

Features

- Consists of: Handshower, Handshower holder, Handshower hose, Handshower holder, Shower hose
- Spray modes: PowderRain, IntenseRain, Pulsating Massage
- Select button for comfortable alternation of spray modes
- Max. flow: 2.5 GPM (9.5 L/Min)
- Pivot connector prevents hose from tangling
- Rinseable sieve insert

Item details

List Price $ 194.00

Technology

Select · Quick Clean · XXL Performance

Design awards

DESIGN AWARD 2021

reddot winner 2021

Compliance / Sustainability

MAP · UPC

Product image
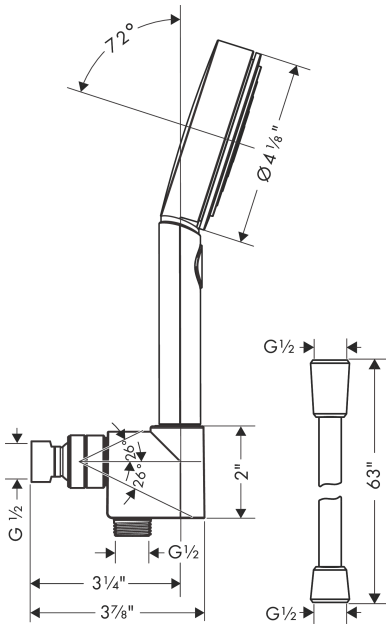
Scale drawing