hansgrohe

Croma Select S
Showerpipe 180 2-Jet, 1.8 GPM
Finish: **brushed nickel** Part no. : **04697821**

Description

Features

- Consists of: Showerhead, Handshower, Thermostatic shower mixer, Handshower hose, Slider, Shower hose, thermostatic shower mixer
- Spray type overhead shower: Rain, IntenseRain
- Spray modes hand shower: SoftRain, IntenseRain, Pulsating Massage
- Flow rate of hand shower at 3 bar: 2.0 GPM (7.6 L/Min)
- Max. flow for Showerpipe: 1.75 GPM (6.6 L/Min)
- Rising pipe can be shortened in height
- Shower bar diameter: 7/8"
- Height-adjustable hand shower holder
- Shower arm swivels left and right
- Anti-scald 100° safety stop
- Integrated volume control/diverter for 2 functions
- Outlets may not be operated simultaneously
- Exposed installation
- Thermostatic cartridge
- Intrinsically safe against backflow
- 2 functions

Item details

List Price	$ 1,747.00

Technology

Select · EcoRight · Quick Clean · XXL Performance

Compliance / Sustainability

UPC

Product image
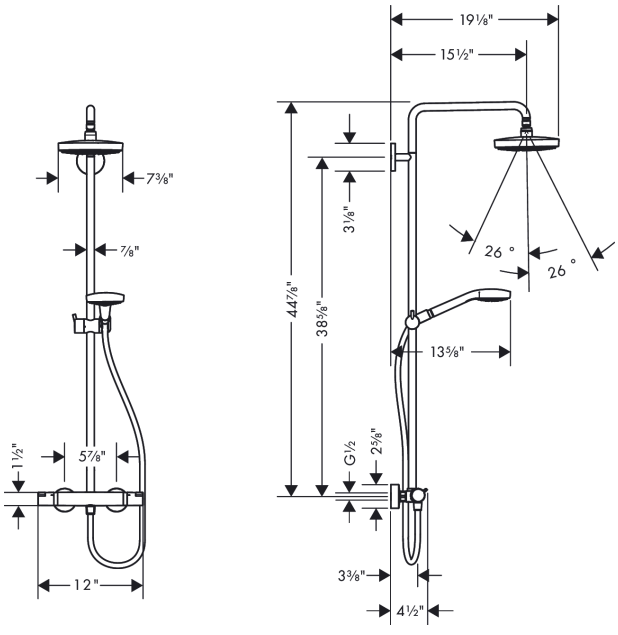
Scale drawing