hansgrohe

Locarno
Prep Kitchen Faucet, 2-Spray Pull-Down, 1.75 GPM
Finishes : **steel optic** Part no. : **04853800**

Description

Features

- Swivel range 150°
- Aerated spray, needle spray
- Toggle spray diverter
- MagFit magnetic sprayhead docking
- deck mounted
- Flow: 1.75 GPM (6.6 L/Min)
- Ceramic cartridge
- Integrated double backflow prevention

Item details

List Price	$ 680.00

Technology

Quick Clean

Compliance

ADA

UPC

Product image
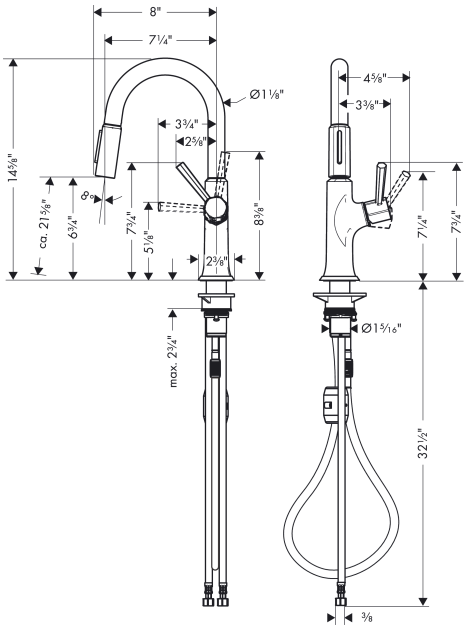
Scale drawing