G-8089-T
MOD+ M-Series Wall-Mounted Stop/Volume Control Valve Trim with Handle

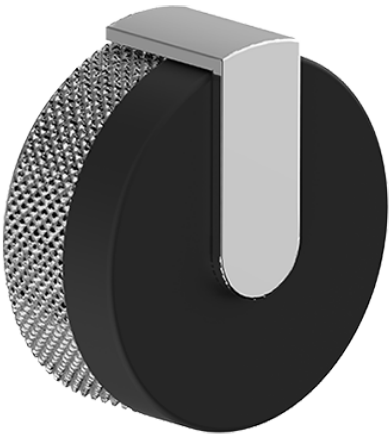

Product Features

- Single metal handle
- Decorative trim plate
- To complete package, you must order G-8076 stop/ volume control valve with pass-through or G-8077 stop/volume control valve
- To complete package, you must order Rough Valve

Available Finishes

G-8089-T
MOD+ M-Series Wall-Mounted Stop/Volume Control
Valve Trim with Handle
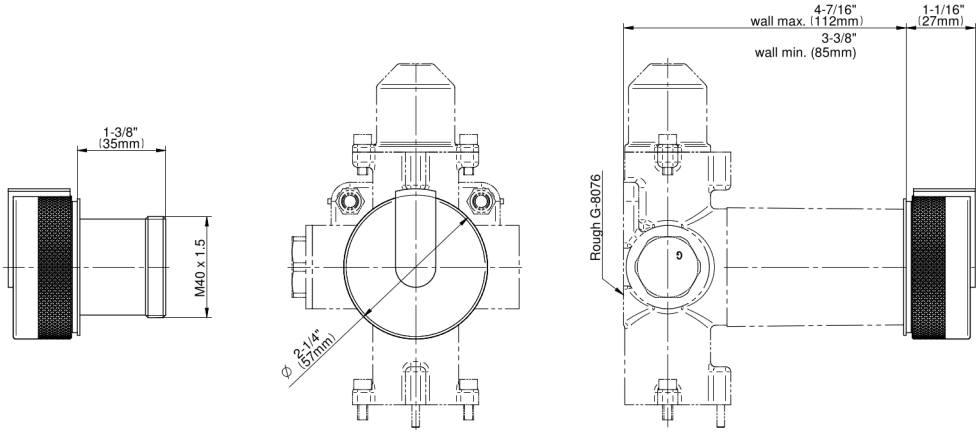
_